Starling Madison Lofquist, Inc.
Consulting Structural and Forensic Engineers
3600 E University Dr, Suite 1400, Phoenix, AZ 85034
tel: (602) 438-2500 fax: (602) 438-2505 www.smleng.com

Roof Tech, Inc.
10620 Treena Street, Suite 230
San Diego, CA 92131

June 9, 2022

Attn: Mr. Yoichi Shimokobe, CEO

Subject: Roof Tech RT-Mini Mount – Structural Analysis

SML Job No.: 471-22

Dear Mr. Shimokobe:

We have analyzed the Roof Tech RT-Mini Mount photovoltaic (PV) panel roof mount system and determined that, for the configurations and criteria described below, it is in compliance with the applicable sections of the following Reference Documents:

Codes: ASCE/SEI 7-16 Min. Design Loads for Buildings & Other Structures
International Building Code 2018 Edition
Other: Aluminum Design Manual, 2015 Edition

The Roof Tech RT-Mini Mount photovoltaic (PV) panel roof mount system is comprised of a 6000 series aluminum RT-Mini Mount base. An appropriately load rated 'L-Foot', by others, may be attached to the RT-Mini Mount base with a stainless steel SS304 8.0 mm or 5/16" diameter bolt, and flange nut. An appropriately load rated rail, by others, may be attached to the 'L-Foot' per the rail manufacturer's installation instructions. The installation of the RT-Mini Mount must be with the long direction parallel to the roof framing and in accordance with Roof Tech's Installation Manual. The system is attached to the roof wood substrate with SS304 5.0 mm x 60 mm wood screws.

Three wood substrates were tested with the fasteners also passing through two layers of composite asphalt roof shingles and 2 layers of building paper. The first tested wood substrate consisted of 7/16" thick sheathing over a 2x4 DF #2 rafter (2x truss top chord OK by inspection), the second tested wood substrate consisted of 7/16" thick OSB only, and the third tested wood substrate consisted of 15/32" thick plywood only. See Exhibit 'A' – attached. **Two wood screws are required at the rafter installations and five wood screws are required at the OSB and plywood only installations.**

The testing data provided by Institute of Building Technology (IBT) report no.: 2426-18005 project no.: 29702 dated March 21, 2018, shows that the critical failure occurs in one of three ways; pullout of the wood screws from the 2x rafter, yielding of the attached components in shear, or pullout of the nails attaching the OSB/Plywood to the 2x rafter. Maximum allowable values for these failure conditions were derived using a safety factor of 2.0 on the ultimate loads resulting in aluminum failure and a safety factor of 3.0 on the loads resulting in wood failure. The testing was performed in general accordance with IAPMO Uniform Evaluation Services *Evaluation Criteria for Joist Hangers and Miscellaneous Connectors*, EC002 adopted June 2007, revised January 2016 and ASTM D1761-2012, *Standard Test Methods for Mechanical Fasteners in Wood*.

Compression load capacity on the OSB and plywood installations were determined by testing conducted at Western Technologies Inc. (WT). The data is represented in job no. 2163XD260 event no. G260-3 (OSB) dated January 3, 2014 and job no. 2163XD260 event no. G260-6 (Plywood) dated May 30, 2014. The safety factor for downward compression on the sheathing is 2.0.

<u>The results of the above testing are presented below:</u>

The maximum allowable uplift and shear force for 7/16" thick sheathing over a 2x4 DF #2 rafter is 447 lb and 355 lb respectively. The maximum allowable uplift, down force, and shear force for 7/16" thick OSB only is 153 lb, 258 lb, and 192 lb respectively. The maximum allowable uplift, down force, and shear force for 15/32" thick plywood only is 180 lb, 556 lb, and 277 lb respectively.

The attached tables below show the maximum spacing of the RT Mini Mount for the combined loading criteria of wind speed, roof slope, and snow loads which produce reaction loads less than the allowable loads listed above. The effect of seismic loads (for all design categories A-F) have been determined to be less than the effect due to wind loads in all load conditions and combinations. The assumed topography is flat with a K_{zt} = 1.0. Therefore, the maximum allowable spacing for common load cases due to dead, wind and snow loads are the controlling load cases.

'Rail Option':
The maximum height for the 'Rail Option' is measured from the bottom of the RT Mini Mount base to the top of the rail. See Exhibit 'A' – attached, for the allowable 'Rail Option' PV panel layouts and 'L-Foot' and rail configuration. The maximum rail cantilever shall be limited to the smaller of 40% of the maximum rail span in the 'Rail Option' tables below and the rail manufacturer's specified maximum cantilever. It is the responsibility of the contractor to verify that the 'L-Foot' and rails that are used have a span rating greater than that shown in the 'Rail Option' tables below. Provide thermal expansion splices along the rail at intervals not to exceed manufacturer's recommendations or 14 feet o.c., and refer to the rail manufacturer's thermal expansion splice detailing for proper installation.

The following conversion chart has been created to help clarify the ASCE 7-16 roof zones, which vary from gable to hip and from various roof pitches, while also keeping the spacing tables in as simple a form as possible.

For each ASCE figure 30.3-2A to 30.3-2H (See pages 4 to 10, which each have up to six (6) roof zones, we have converted those to three (3) "Roof Areas" based on their GCp value.

Conversion Chart - SML Table Roof Areas to ASCE 7-16 Roof Zones

Roof Type	Roof Slopes, (deg)	Roof Areas Per SML Tables	Roof Zones Per ASCE	Effective Wind Area,	GCp Leeward	Effective Wind Area,	GCp Windward
Gable Roof	0 to 7	1	1`, 1	10	-1.7	10	0.3
		2	2	10	-2.3	10	0.3
		3	3	10	-3.2	10	0.3
	7 to 20	1	1, 2e	10	-2	2	0.7
		2	2n, 2r, 3e	10	-3	2	0.7
		3	3r	10	-3.6	2	0.7
	20 to 27	1	1, 2e	10	-1.5	2	0.7
		2	2n, 2r, 3e	10	-2.5	2	0.7
		3	3r	4	-3.6	2	0.7
	27 to 45	1	1, 2e, 2r	10	-1.8	10	0.9
		2	2n, 3r	10	-2	10	0.9
		3	3e	2	-3.2	10	0.9
Hip Roof	0 to 7	NA	NA	NA	NA	NA	NA
	7 to 20	1	1	10	-1.8	10	0.7
		2	2r	10	-2.4	10	0.7
		3	2e, 3	10	-2.6	10	0.7
	20 to 27	1	1	10	-1.4	10	0.7
		2	2e, 2r, 3	10	-2	10	0.7
		3	NA	NA	NA	NA	NA
	27 to 45	1	1	10	-1.5	3	0.9
		2	2e, 2r	3	-2.8	3	0.9
		3	3	5	-3.6	3	0.9

Combining Rafter and Deck-Only Mounts:
It is permissible to combine rafter and deck-only mounting as shown in appendix B, at the end of this letter. In summary, the rafter-to-deck spacing shall be the average of the rafter spacing and deck-only (OSB or Plywood Only) spacing.

Roof Areas Per SML Tables	Roof Zones Per ASCE 7-16
1	1`, 1
2	2
3	3

Diagrams

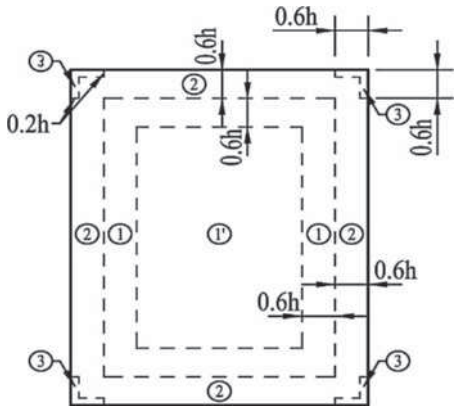

PLAN

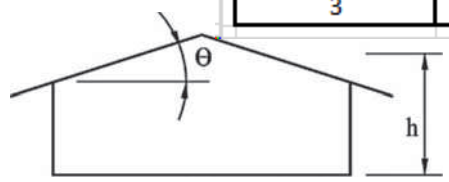

ELEVATION

Notation

B = Horizontal dimension of building measured normal to wind direction, in ft (m).
h = Eave height shall be used for $\theta = 10°$.
θ = Angle of plane of roof from horizontal, in degrees.

External Pressure Coefficients

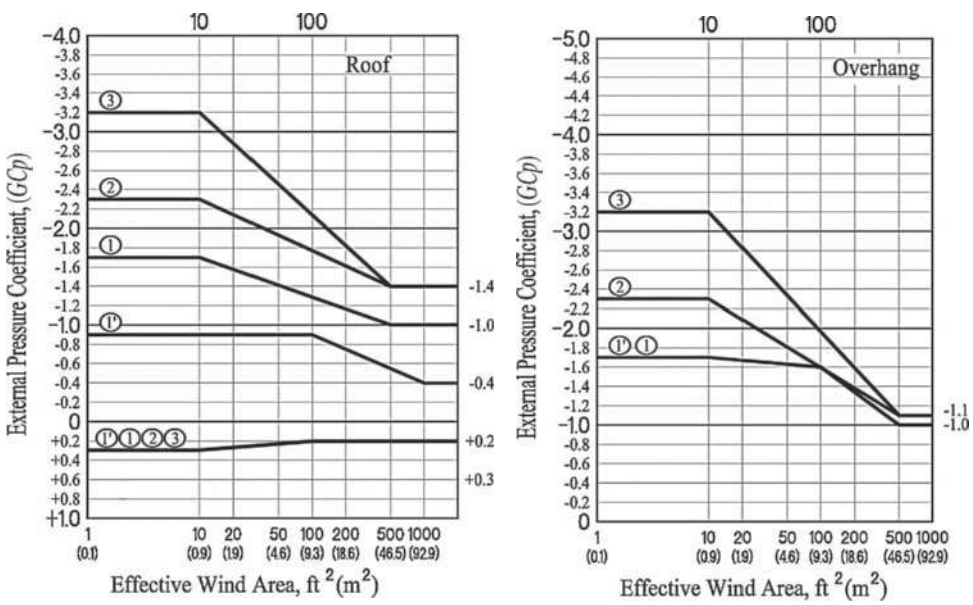

Notes

1. Vertical scale denotes (GC_p) to be used with q_h.
2. Horizontal scale denotes effective wind area, in ft^2 (m^2).
3. Plus and minus signs signify pressures acting toward and away from the surfaces, respectively.
4. Each component shall be designed for maximum positive and negative pressures.
5. If a parapet equal to or higher than 3 ft (0.9 m) is provided around the perimeter of the roof with $\theta \leq 7°$, the negative values of (GC_p) in Zone 3 shall be equal to those for Zone 2, and positive values of (GC_p) in Zones 2 and 3 shall be set equal to those for wall Zones 4 and 5, respectively, in Fig. 30.3-1.
6. Values of (GC_p) for roof overhangs include pressure contributions from both upper and lower surfaces.
7. If overhangs exist, the lesser horizontal dimension of the building shall not include any overhang dimension, but the edge distance, a, shall be measured from the outside edge of the overhang.

FIGURE 30.3-2A Components and Cladding [$h \leq 60$ ft ($h \leq 18.3$ m)]: External Pressure Coefficients, (GC_p), for Enclosed and Partially Enclosed Buildings—Gable Roofs, $\theta \leq 7°$

Roof Areas Per SML Tables	Roof Zones Per ASCE 7-16
1	1, 2e
2	2n, 2r, 3e
3	3r

Diagrams

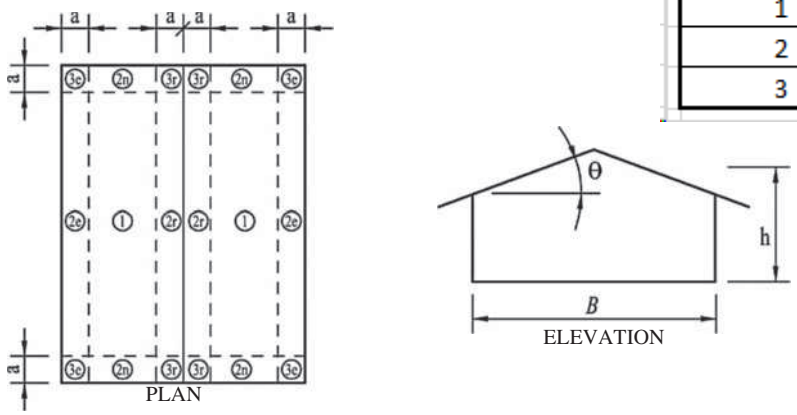

Notation

a = 10% of least horizontal dimension or 0.4h, whichever is smaller, but not less than either 4% of least horizontal dimension or 3 ft (0.9 m). If an overhang exists, the edge distance shall be measured from the outside edge of the overhang. The horizontal dimensions used to compute the edge distance shall not include any overhang distances.

B = Horizontal dimension of building measured normal to wind direction, in ft (m).

h = Mean roof height, in ft (m), except that eave height shall be used for $\theta \leq 10°$.

θ = Angle of plane of roof from horizontal, in degrees.

External Pressure Coefficients

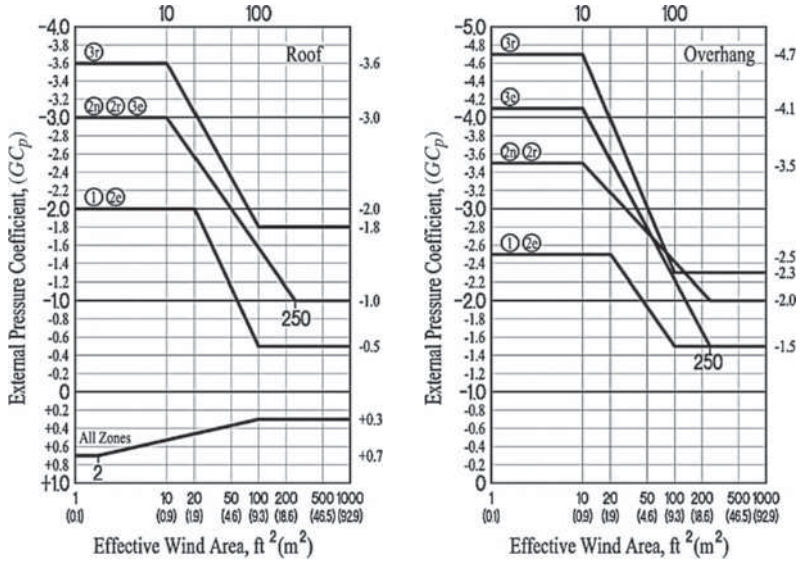

Notes

1. Vertical scale denotes (GCp) to be used with q_h.
2. Horizontal scale denotes effective wind area, in ft^2 (m^2).
3. Plus and minus signs signify pressures acting toward and away from the surfaces, respectively.
4. Each component shall be designed for maximum positive and negative pressures.
5. Values of (GCp) for roof overhangs include pressure contributions from both upper and lower surfaces.
6. If overhangs exist, the lesser horizontal dimension of the building shall not include any overhang dimension, but the edge distance, a, shall be measured from the outside edge of the overhang.

FIGURE 30.3-2B Components and Cladding [$h \leq 60$ ft ($h \leq 18.3$ m)]: External Pressure Coefficients, (GC_p), for Enclosed and Partially Enclosed Buildings—Gable Roofs, $7° < \theta \leq 20°$

Roof Areas Per SML Tables	Roof Zones Per ASCE 7-16
1	1, 2e
2	2n, 2r, 3e
3	3r

Diagrams

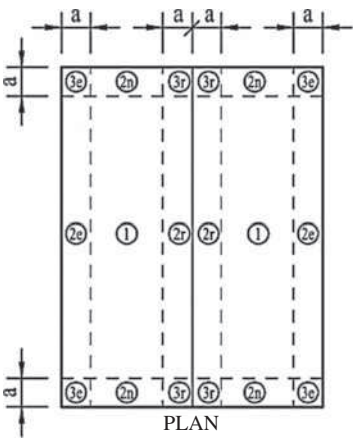

PLAN

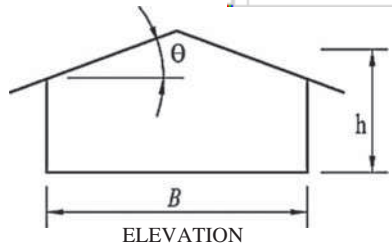

ELEVATION

Notation

a = 10% of least horizontal dimension or 0.4h, whichever is smaller, but not less than either 4% of least horizontal dimension or 3 ft (0.9 m). If an overhang exists, the edge distance shall be measured from the outside edge of the overhang. The horizontal dimensions used to compute the edge distance shall not include any overhang distances.

B = Horizontal dimension of building measured normal to wind direction, in ft (m).

h = Mean roof height, in ft (m).

θ = Angle of plane of roof from horizontal, in degrees.

External Pressure Coefficients

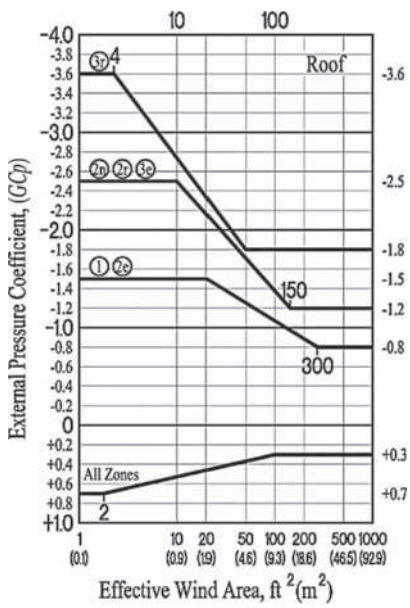

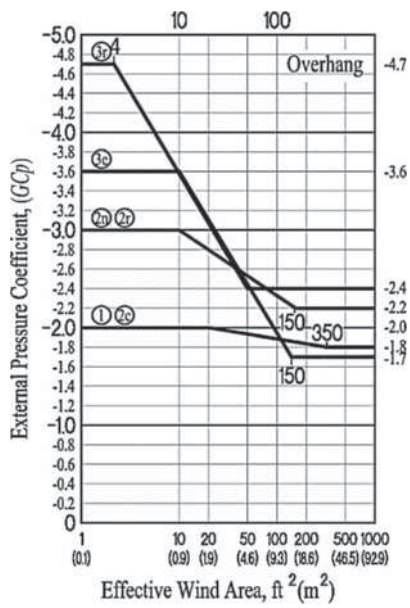

Notes

1. Vertical scale denotes (GCp) to be used with q_h.
2. Horizontal scale denotes effective wind area, in ft^2 (m^2).
3. Plus and minus signs signify pressures acting toward and away from the surfaces, respectively.
4. Each component shall be designed for maximum positive and negative pressures.
5. Values of (GCp) for roof overhangs include pressure contributions from both upper and lower surfaces.
6. If overhangs exist, the lesser horizontal dimension of the building shall not include any overhang dimension, but the edge distance, a, shall be measured from the outside edge of the overhang.

FIGURE 30.3-2C Components and Cladding [$h \leq 60$ ft ($h \leq 18.3$ m)]: External Pressure Coefficients, (GC_p), for Enclosed and Partially Enclosed Buildings—Gable Roofs, 20° < θ ≤ 27°

Roof Areas Per SML Tables	Roof Zones Per ASCE 7-16
1	1, 2e, 2r
2	2n, 3r
3	3e

Diagrams

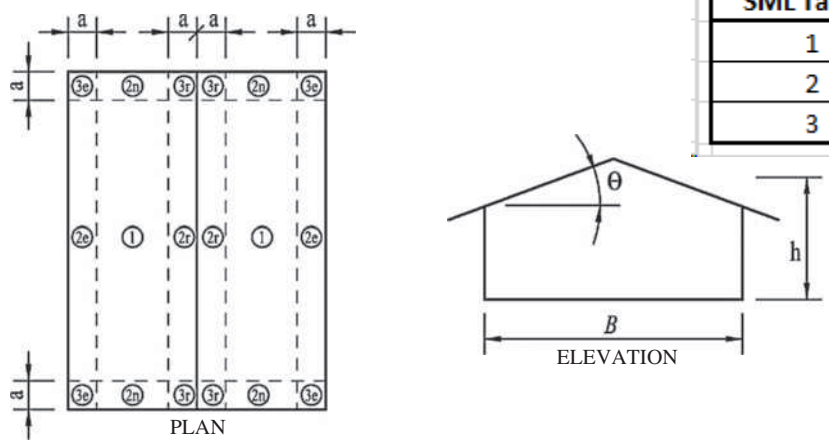

Notation

a = 10% of least horizontal dimension or 0.4h, whichever is smaller, but not less than either 4% of least horizontal dimension or 3 ft (0.9 m). If an overhang exists, the edge distance shall be measured from the outside edge of the overhang. The horizontal dimensions used to compute the edge distance shall not include any overhang distances.

B = Horizontal dimension of building measured normal to wind direction, in ft (m).

h = Mean roof height, in ft (m).

θ = Angle of plane of roof from horizontal, in degrees.

External Pressure Coefficients

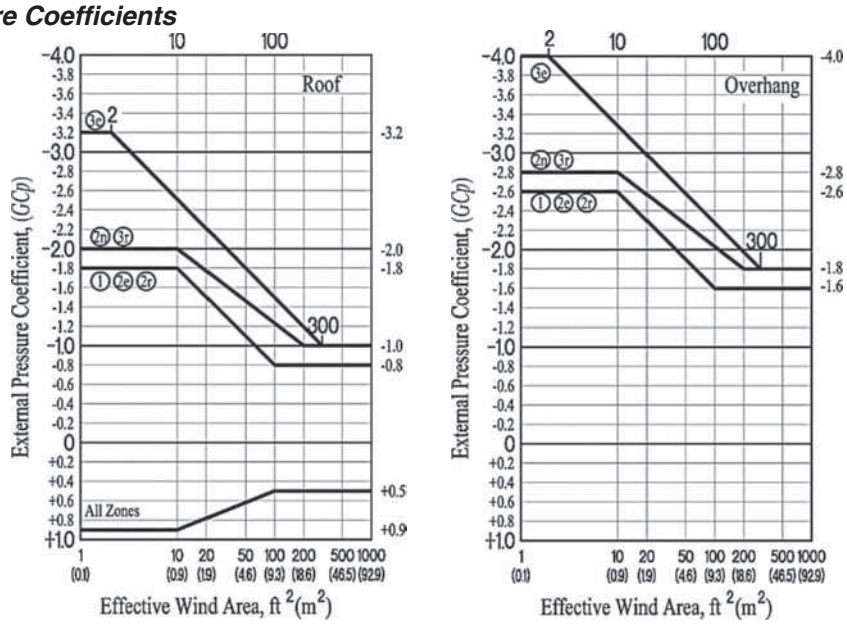

Notes

1. Vertical scale denotes (GC_p) to be used with q_h.
2. Horizontal scale denotes effective wind area, in ft^2 (m^2).
3. Plus and minus signs signify pressures acting toward and away from the surfaces, respectively.
4. Each component shall be designed for maximum positive and negative pressures.
5. Values of (GC_p) for roof overhangs include pressure contributions from both upper and lower surfaces.
6. If overhangs exist, the lesser horizontal dimension of the building shall not include any overhang dimension, but the edge distance, a, shall be measured from the outside edge of the overhang.

FIGURE 30.3-2D Components and Cladding [$h \leq 60$ ft ($h \leq 18.3$ m)]: External Pressure Coefficients, (GC_p), for Enclosed and Partially Enclosed Buildings—Gable Roofs, 27° < θ ≤ 45°

Roof Areas Per SML Tables	Roof Zones Per ASCE 7-16
1	1
2	2r
3	2e, 3

Diagrams

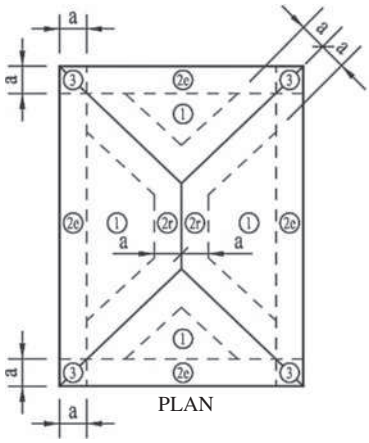

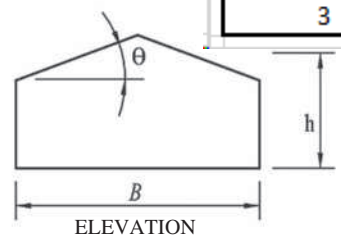

Notation

a = 10% of least horizontal dimension or 0.4h, whichever is smaller, but not less than either 4% of least horizontal dimension or 3 ft (0.9 m). If an overhang exists, the edge distance shall be measured from the outside edge of the overhang. The horizontal dimensions used to compute the edge distance shall not include any overhang distances.

h = Mean roof height, in ft (m), except that eave height shall be used for $\theta \leq 10°$.

B = Horizontal dimension of building measured normal to wind direction, in ft (m).

θ = Angle of plane of roof from horizontal, in degrees.

External Pressure Coefficients

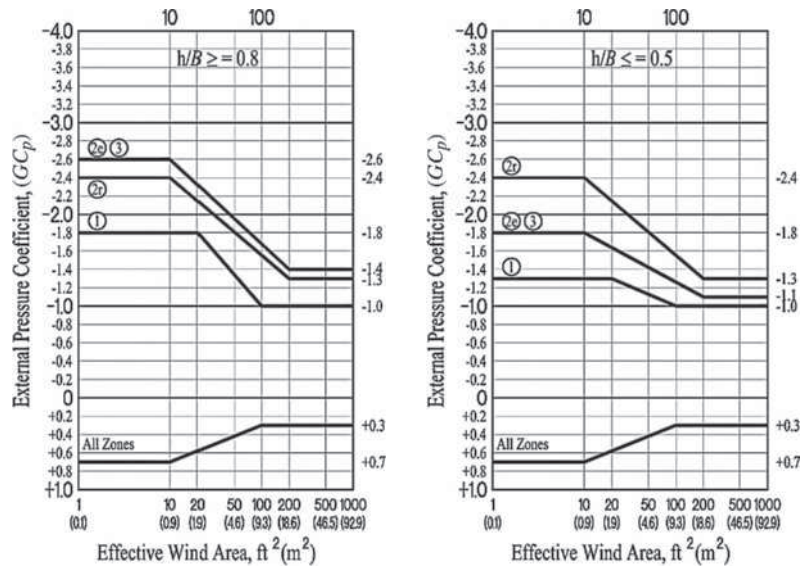

Notes

1. Vertical scale denotes (GCp) to be used with q_h.
2. Horizontal scale denotes effective wind area, in ft^2 (m^2).
3. Plus and minus signs signify pressures acting toward and away from the surfaces, respectively.
4. Each component shall be designed for maximum positive and negative pressures.
5. If overhangs exist, the lesser horizontal dimension of the building shall not include any overhang dimension, but the edge distance, a, shall be measured from the outside edge of the overhang.
6. Interpolation of (GCp) between the two different h/B values is required for $0.5 < h/B < 0.8$.
7. B for Zone 3 is the least horizontal dimension. B for Zones 1 and 2e is normal to the building width and normal to the eave defining Zone 2e.

FIGURE 30.3-2E Components and Cladding [$h \leq 60$ ft ($h \leq 18.3$ m)]: External Pressure Coefficients, (GC_p), for Enclosed and Partially Enclosed Buildings—Hip Roofs, $7° < \theta \leq 20°$ (Roof)

Roof Areas Per SML Tables	Roof Zones Per ASCE 7-16
1	1
2	2e, 2r, 3
3	NA

Diagrams

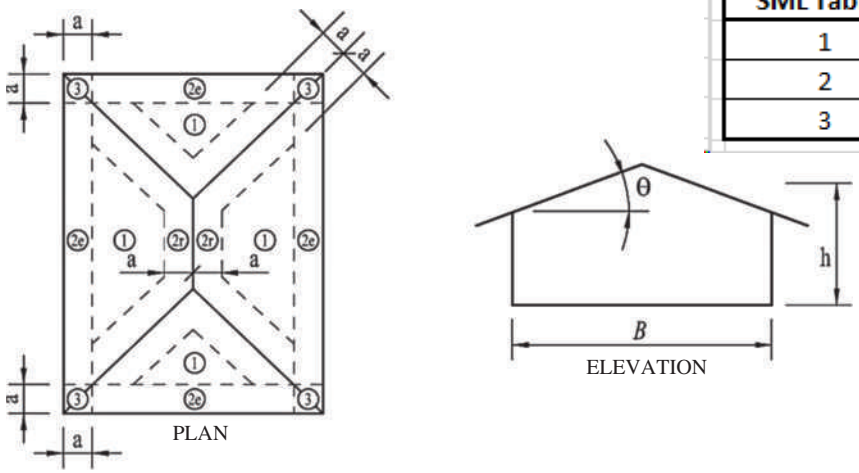

Notation

a = 10% of least horizontal dimension or 0.4h, whichever is smaller, but not less than either 4% of least horizontal dimension or 3 ft (0.9 m). If an overhang exists, the edge distance shall be measured from the outside edge of the overhang. The horizontal dimensions used to compute the edge distance shall not include any overhang distances.
B = Horizontal dimension of building measured normal to wind direction, in ft (m).
h = Mean roof height, in ft (m).
θ = Angle of plane of roof from horizontal, in degrees.

External Pressure Coefficients

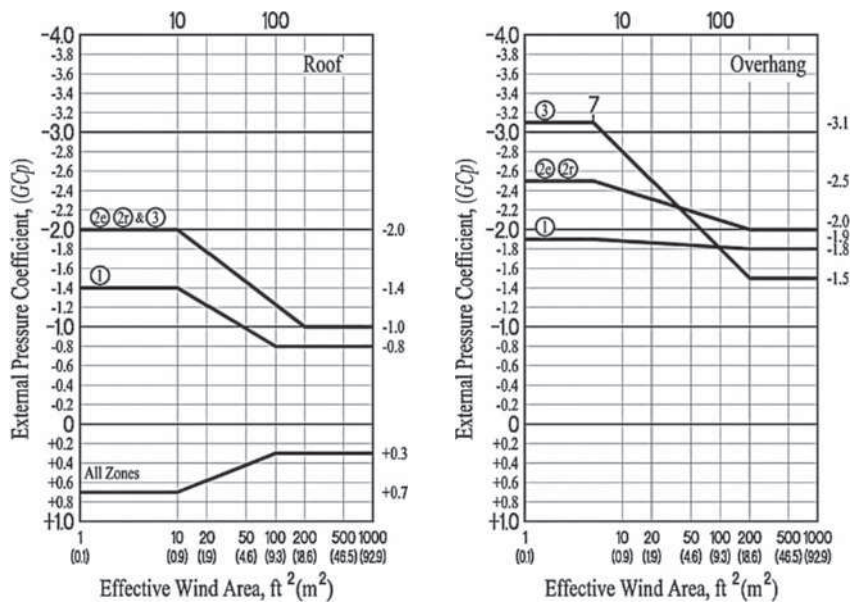

Notes

1. Vertical scale denotes (GCp) to be used with q_h.
2. Horizontal scale denotes effective wind area, in ft^2 (m^2).
3. Plus and minus signs signify pressures acting toward and away from the surfaces, respectively.
4. Each component shall be designed for maximum positive and negative pressures.
5. Values of (GCp) for roof overhangs include pressure contributions from both upper and lower surfaces.
6. If overhangs exist, the lesser horizontal dimension of the building shall not include any overhang dimension, but the edge distance, a, shall be measured from the outside edge of the overhang.

FIGURE 30.3-2G Components and Cladding [$h \leq 60$ ft ($h \leq 18.3$ m)]: External Pressure Coefficients, (GC_p), for Enclosed and Partially Enclosed Buildings—Hip Roofs, 20° < θ ≤ 27° (Roof and Overhang)

Roof Areas Per SML Tables	Roof Zones Per ASCE 7-16
1	1
2	2e, 2r
3	3

Diagrams

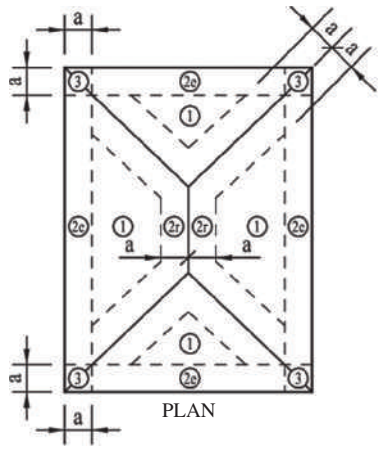

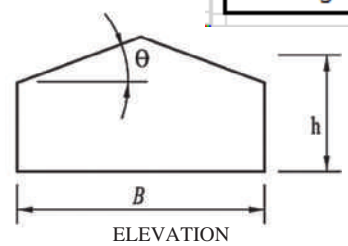

Notation

a = 10% of least horizontal dimension or 0.4h, whichever is smaller, but not less than either 4% of least horizontal dimension or 3 ft (0.9 m). If an overhang exists, the edge distance shall be measured from the outside edge of the overhang. The horizontal dimensions used to compute the edge distance shall not include any overhang distances.

B = Horizontal dimension of building measured normal to wind direction, in ft (m).

h = Mean roof height, in ft (m).

θ = Angle of plane of roof from horizontal, in degrees.

External Pressure Coefficients

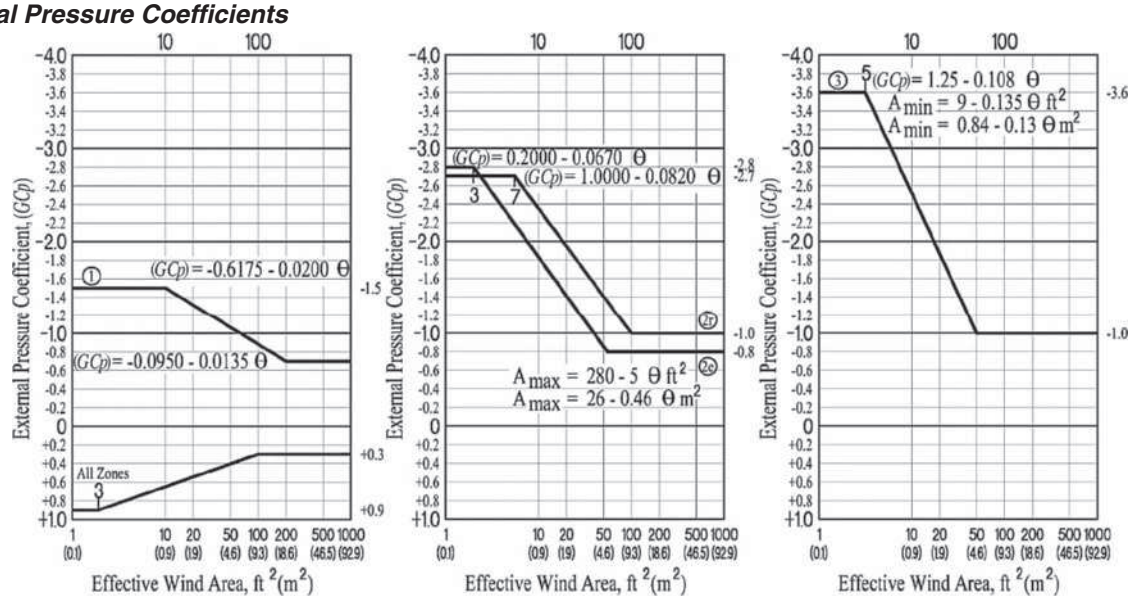

Notes

1. Vertical scale denotes (GCp) to be used with q_h.
2. Horizontal scale denotes effective wind area, in ft^2 (m^2).
3. Plus and minus signs signify pressures acting toward and away from the surfaces, respectively.
4. Each component shall be designed for maximum positive and negative pressures.
5. If overhangs exist, the lesser horizontal dimension of the building shall not include any overhang dimension, but the edge distance, a, shall be measured from the outside edge of the overhang.
7. A_{min} = the minimum tributary area (i.e., areas less than A_{min} are to use (GCp) value for A_{min}).
8. A_{max} = the maximum tributary area (i.e., areas greater than A_{max} are to use (GCp) value for A_{max}).
9. (GCp) values given for roof slope, θ = 45°; for other slopes use the equations.

FIGURE 30.3-2H Components and Cladding [$h \leq 60$ ft ($h \leq 18.3$ m)]: External Pressure Coefficients, (GC_p), for Enclosed and Partially Enclosed Buildings—Hip Roofs, 27° < θ ≤ 45° (Roof)

Gable Roof RT1	RT-[E] Mount Mini Rafter Installations (60 Cell PV Panels) Maximum Mount Spacing in Inches														
	Portrait Orientation - ASCE 7-16														
Snow Load	Exposure Category	Roof Angle	Roof Area	Basic Wind Speed, V (mph) 95	100	105	110	115	120	130	140	150	160	170	180
0 PSF	B	0 to 6 Degrees	1	96	96	96	96	96	96	88	74	64	56	49	43
			2	96	96	96	91	82	75	63	54	46	40	36	32
			3	87	78	70	63	57	52	44	38	33	29	25	22
		7 to 27 Degrees	1	96	96	96	96	92	84	71	61	53	46	40	36
			2	90	81	73	66	60	55	46	40	34	30	27	24
			3	73	65	59	54	49	45	38	33	28	25	22	19
		28 to 45 Degrees	1	96	96	96	96	94	87	74	64	56	49	43	39
			2	96	96	96	93	85	78	67	57	50	44	39	35
			3	78	70	64	58	53	49	42	36	31	27	24	22
	C	0 to 6 Degrees	1	96	96	96	87	79	72	61	52	45	39	34	30
			2	86	77	69	63	57	52	44	37	32	28	25	22
			3	60	54	49	44	40	37	31	26	23	20	18	16
		7 to 27 Degrees	1	96	87	78	71	64	59	50	43	37	32	28	25
			2	63	56	51	46	42	39	33	28	24	21	19	17
			3	51	46	42	38	34	32	27	23	20	17	15	14
		28 to 45 Degrees	1	96	89	81	74	67	62	53	46	40	35	31	27
			2	89	80	73	66	61	56	48	41	36	31	28	25
			3	56	50	46	41	38	35	30	26	22	19	17	15
	D	0 to 6 Degrees	1	96	89	80	73	66	60	51	43	37	33	29	25
			2	72	64	58	52	48	43	37	31	27	24	21	19
			3	50	45	41	37	34	31	26	22	19	17	15	13
		7 to 27 Degrees	1	81	72	65	59	54	49	42	36	31	27	24	21
			2	53	47	43	39	35	32	27	23	20	18	16	14
			3	43	39	35	32	29	27	23	19	17	15	13	11
		28 to 45 Degrees	1	83	75	68	62	57	52	45	38	33	29	26	23
			2	75	68	62	56	51	47	40	35	30	26	23	21
			3	47	42	38	35	32	29	25	22	19	16	14	13
1-10 PSF	B	0 to 6 Degrees	1	96	96	96	96	96	96	88	74	64	56	49	43
			2	96	96	96	91	82	75	63	54	46	40	36	32
			3	87	78	70	63	57	52	44	38	33	29	25	22
		7 to 27 Degrees	1	96	96	96	96	92	84	71	61	53	46	40	36
			2	90	81	73	66	60	55	46	40	34	30	27	24
			3	73	65	59	54	49	45	38	33	28	25	22	19
		28 to 45 Degrees	1	96	96	96	96	94	87	74	64	56	49	43	39
			2	96	96	96	93	85	78	67	57	50	44	39	35
			3	78	70	64	58	53	49	42	36	31	27	24	22
	C	0 to 6 Degrees	1	96	96	96	87	79	72	61	52	45	39	34	30
			2	86	77	69	63	57	52	44	37	32	28	25	22
			3	60	54	49	44	40	37	31	26	23	20	18	16
		7 to 27 Degrees	1	96	87	78	71	64	59	50	43	37	32	28	25
			2	63	56	51	46	42	39	33	28	24	21	19	17
			3	51	46	42	38	34	32	27	23	20	17	15	14
		28 to 45 Degrees	1	96	89	81	74	67	62	53	46	40	35	31	27
			2	89	80	73	66	61	56	48	41	36	31	28	25
			3	56	50	46	41	38	35	30	26	22	19	17	15
	D	0 to 6 Degrees	1	96	89	80	73	66	60	51	43	37	33	29	25
			2	72	64	58	52	48	43	37	31	27	24	21	19
			3	50	45	41	37	34	31	26	22	19	17	15	13
		7 to 27 Degrees	1	81	72	65	59	54	49	42	36	31	27	24	21
			2	53	47	43	39	35	32	27	23	20	18	16	14
			3	43	39	35	32	29	27	23	19	17	15	13	11
		28 to 45 Degrees	1	83	75	68	62	57	52	45	38	33	29	26	23
			2	75	68	62	56	51	47	40	35	30	26	23	21
			3	47	42	38	35	32	29	25	22	19	16	14	13
11-20 PSF	B	0 to 6 Degrees	1	96	96	96	96	96	96	88	74	64	56	49	43
			2	96	96	96	91	82	75	63	54	46	40	36	32
			3	87	78	70	63	57	52	44	38	33	29	25	22
		7 to 27 Degrees	1	96	96	96	96	92	84	71	61	53	46	40	36
			2	90	81	73	66	60	55	46	40	34	30	27	24
			3	73	65	59	54	49	45	38	33	28	25	22	19
		28 to 45 Degrees	1	96	96	96	96	94	87	74	64	56	49	43	39
			2	96	96	96	93	85	78	67	57	50	44	39	35
			3	78	70	64	58	53	49	42	36	31	27	24	22
	C	0 to 6 Degrees	1	96	96	96	87	79	72	61	52	45	39	34	30
			2	86	77	69	63	57	52	44	37	32	28	25	22
			3	60	54	49	44	40	37	31	26	23	20	18	16
		7 to 27 Degrees	1	96	87	78	71	64	59	50	43	37	32	28	25
			2	63	56	51	46	42	39	33	28	24	21	19	17
			3	51	46	42	38	34	32	27	23	20	17	15	14
		28 to 45 Degrees	1	96	89	81	74	67	62	53	46	40	35	31	27
			2	89	80	73	66	61	56	48	41	36	31	28	25
			3	56	50	46	41	38	35	30	26	22	19	17	15
	D	0 to 6 Degrees	1	96	89	80	73	66	60	51	43	37	33	29	25
			2	72	64	58	52	48	43	37	31	27	24	21	19
			3	50	45	41	37	34	31	26	22	19	17	15	13
		7 to 27 Degrees	1	81	72	65	59	54	49	42	36	31	27	24	21
			2	53	47	43	39	35	32	27	23	20	18	16	14
			3	43	39	35	32	29	27	23	19	17	15	13	11
		28 to 45 Degrees	1	83	75	68	62	57	52	45	38	33	29	26	23
			2	75	68	62	56	51	47	40	35	30	26	23	21
			3	47	42	38	35	32	29	25	22	19	16	14	13

Note: See SML "Roof Area" conversion chart and associated ASCE 7-16 Roof Zones on pages 4-10.

Gable Roof RT1	RT-[E] Mount Mini Rafter Installations (60 Cell PV Panels) Maximum Mount Spacing in Inches													
Portrait Orientation - ASCE 7-16														
Snow Load	Exposure Category	Roof Angle	Roof Area	Basic Wind Speed, V (mph) 95	100	105	110	115	120	130	140	150	160	170	180
21-30 PSF	B	0 to 6 Degrees	1	96	96	96	96	96	96	88	74	64	56	49	43
			2	96	96	96	91	82	75	63	54	46	40	36	32
			3	87	78	70	63	57	52	44	38	33	29	25	22
		7 to 27 Degrees	1	96	96	96	96	92	84	71	61	53	46	40	36
			2	90	81	73	66	60	55	46	40	34	30	27	24
			3	73	65	59	54	49	45	38	33	28	25	22	19
		28 to 45 Degrees	1	96	96	96	96	94	87	74	64	56	49	43	39
			2	96	96	96	93	85	78	67	57	50	44	39	35
			3	78	70	64	58	53	49	42	36	31	27	24	22
	C	0 to 6 Degrees	1	96	96	96	87	79	72	61	52	45	39	34	30
			2	86	77	69	63	57	52	44	37	32	28	25	22
			3	60	54	49	44	40	37	31	26	23	20	18	16
		7 to 27 Degrees	1	96	87	78	71	64	59	50	43	37	32	28	25
			2	63	56	51	46	42	39	33	28	24	21	19	17
			3	51	46	42	38	34	32	27	23	20	17	15	14
		28 to 45 Degrees	1	96	89	81	74	67	62	53	46	40	35	31	27
			2	89	80	73	66	61	56	48	41	36	31	28	25
			3	56	50	46	41	38	35	30	26	22	19	17	15
	D	0 to 6 Degrees	1	96	89	80	73	66	60	51	43	37	33	29	25
			2	72	64	58	52	48	43	37	31	27	24	21	19
			3	50	45	41	37	34	31	26	22	19	17	15	13
		7 to 27 Degrees	1	81	72	65	59	54	49	42	36	31	27	24	21
			2	53	47	43	39	35	32	27	23	20	18	16	14
			3	43	39	35	32	29	27	23	19	17	15	13	11
		28 to 45 Degrees	1	83	75	68	62	57	52	45	38	33	29	26	23
			2	75	68	62	56	51	47	40	35	30	26	23	21
			3	47	42	38	35	32	29	25	22	19	16	14	13
31-40 PSF	B	0 to 6 Degrees	1	96	96	96	96	96	96	88	74	64	56	49	43
			2	96	96	96	91	82	75	63	54	46	40	36	32
			3	87	78	70	63	57	52	44	38	33	29	25	22
		7 to 27 Degrees	1	96	96	96	96	92	84	71	61	53	46	40	36
			2	90	81	73	66	60	55	46	40	34	30	27	24
			3	73	65	59	54	49	45	38	33	28	25	22	19
		28 to 45 Degrees	1	96	96	96	96	94	87	74	64	56	49	43	39
			2	96	96	96	93	85	78	67	57	50	44	39	35
			3	78	70	64	58	53	49	42	36	31	27	24	22
	C	0 to 6 Degrees	1	96	96	96	87	79	72	61	52	45	39	34	30
			2	86	77	69	63	57	52	44	37	32	28	25	22
			3	60	54	49	44	40	37	31	26	23	20	18	16
		7 to 27 Degrees	1	96	87	78	71	64	59	50	43	37	32	28	25
			2	63	56	51	46	42	39	33	28	24	21	19	17
			3	51	46	42	38	34	32	27	23	20	17	15	14
		28 to 45 Degrees	1	96	89	81	74	67	62	53	46	40	35	31	27
			2	89	80	73	66	61	56	48	41	36	31	28	25
			3	56	50	46	41	38	35	30	26	22	19	17	15
	D	0 to 6 Degrees	1	96	89	80	73	66	60	51	43	37	33	29	25
			2	72	64	58	52	48	43	37	31	27	24	21	19
			3	50	45	41	37	34	31	26	22	19	17	15	13
		7 to 27 Degrees	1	81	72	65	59	54	49	42	36	31	27	24	21
			2	53	47	43	39	35	32	27	23	20	18	16	14
			3	43	39	35	32	29	27	23	19	17	15	13	11
		28 to 45 Degrees	1	83	75	68	62	57	52	45	38	33	29	26	23
			2	75	68	62	56	51	47	40	35	30	26	23	21
			3	47	42	38	35	32	29	25	22	19	16	14	13
41-50 PSF	B	0 to 6 Degrees	1	96	96	96	96	96	96	88	74	64	56	49	43
			2	96	96	96	91	82	75	63	54	46	40	36	32
			3	87	78	70	63	57	52	44	38	33	29	25	22
		7 to 27 Degrees	1	96	96	96	96	92	84	71	61	53	46	40	36
			2	90	81	73	66	60	55	46	40	34	30	27	24
			3	73	65	59	54	49	45	38	33	28	25	22	19
		28 to 45 Degrees	1	96	96	96	96	94	87	74	64	56	49	43	39
			2	96	96	96	93	85	78	67	57	50	44	39	35
			3	78	70	64	58	53	49	42	36	31	27	24	22
	C	0 to 6 Degrees	1	96	96	96	87	79	72	61	52	45	39	34	30
			2	86	77	69	63	57	52	44	37	32	28	25	22
			3	60	54	49	44	40	37	31	26	23	20	18	16
		7 to 27 Degrees	1	96	87	78	71	64	59	50	43	37	32	28	25
			2	63	56	51	46	42	39	33	28	24	21	19	17
			3	51	46	42	38	34	32	27	23	20	17	15	14
		28 to 45 Degrees	1	96	89	81	74	67	62	53	46	40	35	31	27
			2	89	80	73	66	61	56	48	41	36	31	28	25
			3	56	50	46	41	38	35	30	26	22	19	17	15
	D	0 to 6 Degrees	1	96	89	80	73	66	60	51	43	37	33	29	25
			2	72	64	58	52	48	43	37	31	27	24	21	19
			3	50	45	41	37	34	31	26	22	19	17	15	13
		7 to 27 Degrees	1	81	72	65	59	54	49	42	36	31	27	24	21
			2	53	47	43	39	35	32	27	23	20	18	16	14
			3	43	39	35	32	29	27	23	19	17	15	13	11
		28 to 45 Degrees	1	83	75	68	62	57	52	45	38	33	29	26	23
			2	75	68	62	56	51	47	40	35	30	26	23	21
			3	47	42	38	35	32	29	25	22	19	16	14	13

Note: See SML "Roof Area" conversion chart and associated ASCE 7-16 Roof Zones on pages 4-10.

Gable Roof RT1	RT-[E] Mount Mini Rafter Installations (60 Cell PV Panels) Maximum Mount Spacing in Inches														
Portrait Orientation - ASCE 7-16															
Snow Load	Exposure Category	Roof Angle	Roof Area	Basic Wind Speed, V (mph)											
				95	100	105	110	115	120	130	140	150	160	170	180
51-60 PSF	B	0 to 6 Degrees	1	96	96	96	96	96	96	88	74	64	56	49	43
			2	96	96	96	91	82	75	63	54	46	40	36	32
			3	87	78	70	63	57	52	44	38	33	29	25	22
		7 to 27 Degrees	1	84	84	84	84	84	84	71	61	53	46	40	36
			2	84	81	73	66	60	55	46	40	34	30	27	24
			3	73	65	59	54	49	45	38	33	28	25	22	19
		28 to 45 Degrees	1	85	85	85	85	85	85	74	64	56	49	43	39
			2	85	85	85	85	85	78	67	57	50	44	39	35
			3	78	70	64	58	53	49	42	36	31	27	24	22
	C	0 to 6 Degrees	1	96	96	96	87	79	72	61	52	45	39	34	30
			2	86	77	69	63	57	52	44	37	32	28	25	22
			3	60	54	49	44	40	37	31	26	23	20	18	16
		7 to 27 Degrees	1	84	84	78	71	64	59	50	43	37	32	28	25
			2	63	56	51	46	42	39	33	28	24	21	19	17
			3	51	46	42	38	34	32	27	23	20	17	15	14
		28 to 45 Degrees	1	85	85	81	74	67	62	53	46	40	35	31	27
			2	85	80	73	66	61	56	48	41	36	31	28	25
			3	56	50	46	41	38	35	30	26	22	19	17	15
	D	0 to 6 Degrees	1	96	89	80	73	79	60	51	43	37	33	29	25
			2	72	64	58	52	48	43	37	31	27	24	21	19
			3	50	45	41	37	34	31	26	22	19	17	15	13
		7 to 27 Degrees	1	81	72	65	59	54	49	42	36	31	27	24	21
			2	53	47	43	39	35	32	27	23	20	18	16	14
			3	43	39	35	32	29	27	23	19	17	15	13	11
		28 to 45 Degrees	1	83	75	68	62	57	52	45	38	33	29	26	23
			2	75	68	62	56	51	47	40	35	30	26	23	21
			3	47	42	38	35	32	29	25	22	19	16	14	13
61-70 PSF	B	0 to 6 Degrees	1	96	96	96	96	96	96	88	74	64	56	49	43
			2	96	96	96	91	82	75	63	54	46	40	36	32
			3	87	78	70	63	57	52	44	38	33	29	25	22
		7 to 27 Degrees	1	73	73	73	73	73	73	71	61	53	46	40	36
			2	73	73	73	66	60	55	46	40	34	30	27	24
			3	73	65	59	54	49	45	38	33	28	25	22	19
		28 to 45 Degrees	1	74	74	74	74	74	74	74	64	56	49	43	39
			2	74	74	74	74	74	74	67	57	50	44	39	35
			3	74	70	64	58	53	49	42	36	31	27	24	22
	C	0 to 6 Degrees	1	96	96	96	87	79	72	61	52	45	39	34	30
			2	86	77	69	63	57	52	44	37	32	28	25	22
			3	60	54	49	44	40	37	31	26	23	20	18	16
		7 to 27 Degrees	1	73	73	73	71	64	59	50	43	37	32	28	25
			2	63	56	51	46	42	39	33	28	24	21	19	17
			3	51	46	42	38	34	32	27	23	20	17	15	14
		28 to 45 Degrees	1	74	74	74	74	67	62	53	46	40	35	31	27
			2	74	74	73	66	61	56	48	41	36	31	28	25
			3	56	50	46	41	38	35	30	26	22	19	17	15
	D	0 to 6 Degrees	1	96	89	80	73	66	60	51	43	37	33	29	25
			2	72	64	58	52	48	43	37	31	27	24	21	19
			3	50	45	41	37	34	31	26	22	19	17	15	13
		7 to 27 Degrees	1	73	72	65	59	54	49	42	36	31	27	24	21
			2	53	47	43	39	35	32	27	23	20	18	16	14
			3	43	39	35	32	29	27	23	19	17	15	13	11
		28 to 45 Degrees	1	74	74	68	62	57	52	45	38	33	29	26	23
			2	74	68	62	56	51	47	40	35	30	26	23	21
			3	47	42	38	35	32	29	25	22	19	16	14	13

Note: See SML "Roof Area" conversion chart and associated ASCE 7-16 Roof Zones on pages 4-10.

Gable Roof RT2	RT-[E] Mount Mini Rafter Installations (72 Cell PV Panels) Maximum Mount Spacing in Inches													
	Portrait Orientation - ASCE 7-16													
Snow Load	Exposure Category	Roof Angle	Roof Area	Basic Wind Speed, V (mph) 95	100	105	110	115	120	130	140	150	160	170	180
0 PSF	B	0 to 6 Degrees	1	96	96	96	96	96	92	77	65	56	49	43	38
			2	96	96	88	80	72	66	55	47	41	35	31	28
			3	76	68	61	55	50	46	39	33	29	25	22	19
		7 to 27 Degrees	1	96	96	96	89	81	74	62	53	46	40	35	31
			2	79	71	64	58	53	48	41	35	30	26	23	21
			3	64	57	52	47	43	39	33	29	25	22	19	17
		28 to 45 Degrees	1	96	96	96	90	82	76	65	56	49	43	38	34
			2	96	96	89	81	74	68	58	50	44	39	34	30
			3	68	62	56	51	47	43	36	31	27	24	21	19
	C	0 to 6 Degrees	1	96	95	85	76	69	63	53	45	39	34	30	27
			2	76	68	61	55	50	46	38	33	28	25	22	19
			3	53	47	43	39	35	32	27	23	20	17	15	14
		7 to 27 Degrees	1	85	76	68	62	56	52	44	37	32	28	25	22
			2	55	49	45	40	37	34	29	24	21	19	16	14
			3	45	40	36	33	30	28	23	20	17	15	13	12
		28 to 45 Degrees	1	86	78	71	65	59	54	46	40	35	31	27	24
			2	78	70	64	58	53	49	42	36	31	27	24	22
			3	49	44	40	36	33	31	26	22	19	17	15	13
	D	0 to 6 Degrees	1	88	78	70	64	58	53	44	38	33	29	25	22
			2	63	56	51	46	42	38	32	27	24	21	18	16
			3	44	40	36	32	29	27	23	19	17	15	13	11
		7 to 27 Degrees	1	71	63	57	52	47	43	37	31	27	24	21	19
			2	46	41	37	34	31	28	24	21	18	16	14	12
			3	38	34	31	28	25	23	20	17	15	13	11	10
		28 to 45 Degrees	1	73	66	60	55	50	46	39	34	29	26	23	20
			2	66	59	54	49	45	41	35	30	26	23	20	18
			3	41	37	34	31	28	26	22	19	16	14	13	11
1-10 PSF	B	0 to 6 Degrees	1	96	96	96	96	96	92	77	65	56	49	43	38
			2	96	96	88	80	72	66	55	47	41	35	31	28
			3	76	68	61	55	50	46	39	33	29	25	22	19
		7 to 27 Degrees	1	96	96	96	89	81	74	62	53	46	40	35	31
			2	79	71	64	58	53	48	41	35	30	26	23	21
			3	64	57	52	47	43	39	33	29	25	22	19	17
		28 to 45 Degrees	1	96	96	96	90	82	76	65	56	49	43	38	34
			2	96	96	89	81	74	68	58	50	44	39	34	30
			3	68	62	56	51	47	43	36	31	27	24	21	19
	C	0 to 6 Degrees	1	96	95	85	76	69	63	53	45	39	34	30	27
			2	76	68	61	55	50	46	38	33	28	25	22	19
			3	53	47	43	39	35	32	27	23	20	17	15	14
		7 to 27 Degrees	1	85	76	68	62	56	52	44	37	32	28	25	22
			2	55	49	45	40	37	34	29	24	21	19	16	14
			3	45	40	36	33	30	28	23	20	17	15	13	12
		28 to 45 Degrees	1	86	78	71	65	59	54	46	40	35	31	27	24
			2	78	70	64	58	53	49	42	36	31	27	24	22
			3	49	44	40	36	33	31	26	22	19	17	15	13
	D	0 to 6 Degrees	1	88	78	70	64	58	53	44	38	33	29	25	22
			2	63	56	51	46	42	38	32	27	24	21	18	16
			3	44	40	36	32	29	27	23	19	17	15	13	11
		7 to 27 Degrees	1	71	63	57	52	47	43	37	31	27	24	21	19
			2	46	41	37	34	31	28	24	21	18	16	14	12
			3	38	34	31	28	25	23	20	17	15	13	11	10
		28 to 45 Degrees	1	73	66	60	55	50	46	39	34	29	26	23	20
			2	66	59	54	49	45	41	35	30	26	23	20	18
			3	41	37	34	31	28	26	22	19	16	14	13	11
11-20 PSF	B	0 to 6 Degrees	1	96	96	96	96	96	92	77	65	56	49	43	38
			2	96	96	88	80	72	66	55	47	41	35	31	28
			3	76	68	61	55	50	46	39	33	29	25	22	19
		7 to 27 Degrees	1	96	96	96	89	81	74	62	53	46	40	35	31
			2	79	71	64	58	53	48	41	35	30	26	23	21
			3	64	57	52	47	43	39	33	29	25	22	19	17
		28 to 45 Degrees	1	96	96	96	90	82	76	65	56	49	43	38	34
			2	96	96	89	81	74	68	58	50	44	39	34	30
			3	68	62	56	51	47	43	36	31	27	24	21	19
	C	0 to 6 Degrees	1	96	95	85	76	69	63	53	45	39	34	30	27
			2	76	68	61	55	50	46	38	33	28	25	22	19
			3	53	47	43	39	35	32	27	23	20	17	15	14
		7 to 27 Degrees	1	85	76	68	62	56	52	44	37	32	28	25	22
			2	55	49	45	40	37	34	29	24	21	19	16	14
			3	45	40	36	33	30	28	23	20	17	15	13	12
		28 to 45 Degrees	1	86	78	71	65	59	54	46	40	35	31	27	24
			2	78	70	64	58	53	49	42	36	31	27	24	22
			3	49	44	40	36	33	31	26	22	19	17	15	13
	D	0 to 6 Degrees	1	88	78	70	64	58	53	44	38	33	29	25	22
			2	63	56	51	46	42	38	32	27	24	21	18	16
			3	44	40	36	32	29	27	23	19	17	15	13	11
		7 to 27 Degrees	1	71	63	57	52	47	43	37	31	27	24	21	19
			2	46	41	37	34	31	28	24	21	18	16	14	12
			3	38	34	31	28	25	23	20	17	15	13	11	10
		28 to 45 Degrees	1	73	66	60	55	50	46	39	34	29	26	23	20
			2	66	59	54	49	45	41	35	30	26	23	20	18
			3	41	37	34	31	28	26	22	19	16	14	13	11

Note: See SML "Roof Area" conversion chart and associated ASCE 7-16 Roof Zones on pages 4-10.

Gable Roof RT2	RT-[E] Mount Mini Rafter Installations (72 Cell PV Panels) Maximum Mount Spacing in Inches													
Portrait Orientation - ASCE 7-16														
Snow Load	Exposure Category	Roof Angle	Roof Area	Basic Wind Speed, V (mph) 95	100	105	110	115	120	130	140	150	160	170	180
21-30 PSF	B	0 to 6 Degrees	1	96	96	96	96	96	92	77	65	56	49	43	38
			2	96	96	88	80	72	66	55	47	41	35	31	28
			3	76	68	61	55	50	46	39	33	29	25	22	19
		7 to 27 Degrees	1	96	96	96	89	81	74	62	53	46	40	35	31
			2	79	71	64	58	53	48	41	35	30	26	23	21
			3	64	57	52	47	43	39	33	29	25	22	19	17
		28 to 45 Degrees	1	96	96	96	90	82	76	65	56	49	43	38	34
			2	96	96	89	81	74	68	58	50	44	39	34	30
			3	68	62	56	51	47	43	36	31	27	24	21	19
	C	0 to 6 Degrees	1	96	95	85	76	69	63	53	45	39	34	30	27
			2	76	68	61	55	50	46	38	33	28	25	22	19
			3	53	47	43	39	35	32	27	23	20	17	15	14
		7 to 27 Degrees	1	85	76	68	62	56	52	44	37	32	28	25	22
			2	55	49	45	40	37	34	29	24	21	19	16	14
			3	45	40	36	33	30	28	23	20	17	15	13	12
		28 to 45 Degrees	1	86	78	71	65	59	54	46	40	35	31	27	24
			2	78	70	64	58	53	49	42	36	31	27	24	22
			3	49	44	40	36	33	31	26	22	19	17	15	13
	D	0 to 6 Degrees	1	88	78	70	64	58	53	44	38	33	29	25	22
			2	63	56	51	46	42	38	32	27	24	21	18	16
			3	44	40	36	32	29	27	23	19	17	15	13	11
		7 to 27 Degrees	1	71	63	57	52	47	43	37	31	27	24	21	19
			2	46	41	37	34	31	28	24	21	18	16	14	12
			3	38	34	31	28	25	23	20	17	15	13	11	10
		28 to 45 Degrees	1	73	66	60	55	50	46	39	34	29	26	23	20
			2	66	59	54	49	45	41	35	30	26	23	20	18
			3	41	37	34	31	28	26	22	19	16	14	13	11
31-40 PSF	B	0 to 6 Degrees	1	96	96	96	96	96	92	77	65	56	49	43	38
			2	96	96	88	80	72	66	55	47	41	35	31	28
			3	76	68	61	55	50	46	39	33	29	25	22	19
		7 to 27 Degrees	1	96	96	96	89	81	74	62	53	46	40	35	31
			2	79	71	64	58	53	48	41	35	30	26	23	21
			3	64	57	52	47	43	39	33	29	25	22	19	17
		28 to 45 Degrees	1	96	96	96	90	82	76	65	56	49	43	38	34
			2	96	96	89	81	74	68	58	50	44	39	34	30
			3	68	62	56	51	47	43	36	31	27	24	21	19
	C	0 to 6 Degrees	1	96	95	85	76	69	63	53	45	39	34	30	27
			2	76	68	61	55	50	46	38	33	28	25	22	19
			3	53	47	43	39	35	32	27	23	20	17	15	14
		7 to 27 Degrees	1	85	76	68	62	56	52	44	37	32	28	25	22
			2	55	49	45	40	37	34	29	24	21	19	16	14
			3	45	40	36	33	30	28	23	20	17	15	13	12
		28 to 45 Degrees	1	86	78	71	65	59	54	46	40	35	31	27	24
			2	78	70	64	58	53	49	42	36	31	27	24	22
			3	49	44	40	36	33	31	26	22	19	17	15	13
	D	0 to 6 Degrees	1	88	78	70	64	58	53	44	38	33	29	25	22
			2	63	56	51	46	42	38	32	27	24	21	18	16
			3	44	40	36	32	29	27	23	19	17	15	13	11
		7 to 27 Degrees	1	71	63	57	52	47	43	37	31	27	24	21	19
			2	46	41	37	34	31	28	24	21	18	16	14	12
			3	38	34	31	28	25	23	20	17	15	13	11	10
		28 to 45 Degrees	1	73	66	60	55	50	46	39	34	29	26	23	20
			2	66	59	54	49	45	41	35	30	26	23	20	18
			3	41	37	34	31	28	26	22	19	16	14	13	11
41-50 PSF	B	0 to 6 Degrees	1	96	96	96	96	96	92	77	65	56	49	43	38
			2	96	96	88	80	72	66	55	47	41	35	31	28
			3	76	68	61	55	50	46	39	33	29	25	22	19
		7 to 27 Degrees	1	87	87	87	87	81	74	62	53	46	40	35	31
			2	79	71	64	58	53	48	41	35	30	26	23	21
			3	64	57	52	47	43	39	33	29	25	22	19	17
		28 to 45 Degrees	1	87	87	87	87	82	76	65	56	49	43	38	34
			2	87	87	87	81	74	68	58	50	44	39	34	30
			3	68	62	56	51	47	43	36	31	27	24	21	19
	C	0 to 6 Degrees	1	96	95	85	76	69	63	53	45	39	34	30	27
			2	76	68	61	55	50	46	38	33	28	25	22	19
			3	53	47	43	39	35	32	27	23	20	17	15	14
		7 to 27 Degrees	1	85	76	68	62	56	52	44	37	32	28	25	22
			2	55	49	45	40	37	34	29	24	21	19	16	14
			3	45	40	36	33	30	28	23	20	17	15	13	12
		28 to 45 Degrees	1	86	78	71	65	59	54	46	40	35	31	27	24
			2	78	70	64	58	53	49	42	36	31	27	24	22
			3	49	44	40	36	33	31	26	22	19	17	15	13
	D	0 to 6 Degrees	1	88	78	70	64	58	53	44	38	33	29	25	22
			2	63	56	51	46	42	38	32	27	24	21	18	16
			3	44	40	36	32	29	27	23	19	17	15	13	11
		7 to 27 Degrees	1	71	63	57	52	47	43	37	31	27	24	21	19
			2	46	41	37	34	31	28	24	21	18	16	14	12
			3	38	34	31	28	25	23	20	17	15	13	11	10
		28 to 45 Degrees	1	73	66	60	55	50	46	39	34	29	26	23	20
			2	66	59	54	49	45	41	35	30	26	23	20	18
			3	41	37	34	31	28	26	22	19	16	14	13	11

Note: See SML "Roof Area" conversion chart and associated ASCE 7-16 Roof Zones on pages 4-10.

Gable Roof RT2	RT-[E] Mount Mini Rafter Installations (72 Cell PV Panels) Maximum Mount Spacing in Inches														
Portrait Orientation - ASCE 7-16															
Snow Load	Exposure Category	Roof Angle	Roof Area	Basic Wind Speed, V (mph) 95	100	105	110	115	120	130	140	150	160	170	180
51-60 PSF	B	0 to 6 Degrees	1	96	96	96	96	96	92	77	65	56	49	43	38
			2	96	96	88	80	72	66	55	47	41	35	31	28
			3	76	68	61	55	50	46	39	33	29	25	22	19
		7 to 27 Degrees	1	74	74	74	74	74	74	62	53	46	40	35	31
			2	74	71	64	58	53	48	41	35	30	26	23	21
			3	64	57	52	47	43	39	33	29	25	22	19	17
		28 to 45 Degrees	1	75	75	75	75	75	75	65	56	49	43	38	34
			2	75	75	75	75	74	68	58	50	44	39	34	30
			3	68	62	56	51	47	43	36	31	27	24	21	19
	C	0 to 6 Degrees	1	96	95	85	76	69	63	53	45	39	34	30	27
			2	76	68	61	55	50	46	38	33	28	25	22	19
			3	53	47	43	39	35	32	27	23	20	17	15	14
		7 to 27 Degrees	1	74	74	68	62	56	52	44	37	32	28	25	22
			2	55	49	45	40	37	34	29	24	21	19	16	14
			3	45	40	36	33	30	28	23	20	17	15	13	12
		28 to 45 Degrees	1	75	75	71	65	59	54	46	40	35	31	27	24
			2	75	70	64	58	53	49	42	36	31	27	24	22
			3	49	44	40	36	33	31	26	22	19	17	15	13
	D	0 to 6 Degrees	1	88	78	70	64	69	53	44	38	33	29	25	22
			2	63	56	51	46	42	38	32	27	24	21	18	16
			3	44	40	36	32	29	27	23	19	17	15	13	11
		7 to 27 Degrees	1	71	63	57	52	47	43	37	31	27	24	21	19
			2	46	41	37	34	31	28	24	21	18	16	14	12
			3	38	34	31	28	25	23	20	17	15	13	11	10
		28 to 45 Degrees	1	73	66	60	55	50	46	39	34	29	26	23	20
			2	66	59	54	49	45	41	35	30	26	23	20	18
			3	41	37	34	31	28	26	22	19	16	14	13	11
61-70 PSF	B	0 to 6 Degrees	1	96	96	96	96	96	92	77	65	56	49	43	38
			2	96	96	88	80	72	66	55	47	41	35	31	28
			3	76	68	61	55	50	46	39	33	29	25	22	19
		7 to 27 Degrees	1	64	64	64	64	64	64	62	53	46	40	35	31
			2	64	64	64	58	53	48	41	35	30	26	23	21
			3	64	57	52	47	43	39	33	29	25	22	19	17
		28 to 45 Degrees	1	65	65	65	65	65	65	65	56	49	43	38	34
			2	65	65	65	65	65	65	58	50	44	39	34	30
			3	65	62	56	51	47	43	36	31	27	24	21	19
	C	0 to 6 Degrees	1	96	95	85	76	69	63	53	45	39	34	30	27
			2	76	68	61	55	50	46	38	33	28	25	22	19
			3	53	47	43	39	35	32	27	23	20	17	15	14
		7 to 27 Degrees	1	64	64	64	62	56	52	44	37	32	28	25	22
			2	55	49	45	40	37	34	29	24	21	19	16	14
			3	45	40	36	33	30	28	23	20	17	15	13	12
		28 to 45 Degrees	1	65	65	65	65	59	54	46	40	35	31	27	24
			2	65	65	64	58	53	49	42	36	31	27	24	22
			3	49	44	40	36	33	31	26	22	19	17	15	13
	D	0 to 6 Degrees	1	88	78	70	64	58	53	44	38	33	29	25	22
			2	63	56	51	46	42	38	32	27	24	21	18	16
			3	44	40	36	32	29	27	23	19	17	15	13	11
		7 to 27 Degrees	1	64	63	57	52	47	43	37	31	27	24	21	19
			2	46	41	37	34	31	28	24	21	18	16	14	12
			3	38	34	31	28	25	23	20	17	15	13	11	10
		28 to 45 Degrees	1	65	65	60	55	50	46	39	34	29	26	23	20
			2	65	59	54	49	45	41	35	30	26	23	20	18
			3	41	37	34	31	28	26	22	19	16	14	13	11

Note: See SML "Roof Area" conversion chart and associated ASCE 7-16 Roof Zones on pages 4-10.

Gable Roof RT3

RT-[E] Mount Mini Plywood Only Installations
(60 Cell PV Panels)
Maximum Mount Spacing in Inches

Portrait Orientation - ASCE 7-16

Snow Load	Exposure Category	Roof Angle	Roof Area	Basic Wind Speed, V (mph) 95	100	105	110	115	120	130	140	150	160	170	180
0 PSF	B	0 to 6 Degrees	1	73	65	58	52	47	42	35	30	26	22	20	17
			2	51	45	41	37	33	30	25	21	18	16	14	12
			3	35	31	28	25	23	21	18	15	13	11	10	9
		7 to 27 Degrees	1	58	52	46	42	38	34	29	25	21	18	16	14
			2	37	33	30	27	24	22	19	16	14	12	10	9
			3	30	27	24	22	20	18	15	13	11	10	9	8
		28 to 45 Degrees	1	59	53	48	44	40	36	31	26	23	20	18	16
			2	53	48	43	39	36	33	28	24	20	18	16	14
			3	32	29	26	24	22	20	17	14	13	11	10	9
	C	0 to 6 Degrees	1	49	44	39	35	32	29	24	21	18	15	14	12
			2	35	31	28	25	23	21	17	15	13	11	10	9
			3	24	22	19	18	16	15	12	10	9	8	7	6
		7 to 27 Degrees	1	40	35	32	29	26	24	20	17	15	13	11	10
			2	25	23	21	19	17	15	13	11	10	8	7	6
			3	21	19	17	15	14	13	11	9	8	7	6	5
		28 to 45 Degrees	1	42	37	34	31	28	26	22	19	16	14	12	11
			2	37	33	30	27	25	23	19	17	14	13	11	10
			3	23	21	19	17	15	14	12	10	9	8	7	6
	D	0 to 6 Degrees	1	40	36	32	29	26	24	20	17	15	13	11	10
			2	29	26	23	21	19	17	15	12	11	9	8	7
			3	20	18	16	15	13	12	10	9	7	6	6	5
		7 to 27 Degrees	1	33	29	26	24	22	20	17	14	12	11	9	8
			2	21	19	17	15	14	13	11	9	8	7	6	5
			3	17	16	14	13	12	11	9	8	7	6	5	4
		28 to 45 Degrees	1	35	31	28	26	23	21	18	16	13	12	10	9
			2	31	28	25	23	21	19	16	14	12	11	9	8
			3	19	17	16	14	13	12	10	8	7	6	6	5
1-10 PSF	B	0 to 6 Degrees	1	73	65	58	52	47	42	35	30	26	22	20	17
			2	51	45	41	37	33	30	25	21	18	16	14	12
			3	35	31	28	25	23	21	18	15	13	11	10	9
		7 to 27 Degrees	1	58	52	46	42	38	34	29	25	21	18	16	14
			2	37	33	30	27	24	22	19	16	14	12	10	9
			3	30	27	24	22	20	18	15	13	11	10	9	8
		28 to 45 Degrees	1	59	53	48	44	40	36	31	26	23	20	18	16
			2	53	48	43	39	36	33	28	24	20	18	16	14
			3	32	29	26	24	22	20	17	14	13	11	10	9
	C	0 to 6 Degrees	1	49	44	39	35	32	29	24	21	18	15	14	12
			2	35	31	28	25	23	21	17	15	13	11	10	9
			3	24	22	19	18	16	15	12	10	9	8	7	6
		7 to 27 Degrees	1	40	35	32	29	26	24	20	17	15	13	11	10
			2	25	23	21	19	17	15	13	11	10	8	7	6
			3	21	19	17	15	14	13	11	9	8	7	6	5
		28 to 45 Degrees	1	42	37	34	31	28	26	22	19	16	14	12	11
			2	37	33	30	27	25	23	19	17	14	13	11	10
			3	23	21	19	17	15	14	12	10	9	8	7	6
	D	0 to 6 Degrees	1	40	36	32	29	26	24	20	17	15	13	11	10
			2	29	26	23	21	19	17	15	12	11	9	8	7
			3	20	18	16	15	13	12	10	9	7	6	6	5
		7 to 27 Degrees	1	33	29	26	24	22	20	17	14	12	11	9	8
			2	21	19	17	15	14	13	11	9	8	7	6	5
			3	17	16	14	13	12	11	9	8	7	6	5	4
		28 to 45 Degrees	1	35	31	28	26	23	21	18	16	13	12	10	9
			2	31	28	25	23	21	19	16	14	12	11	9	8
			3	19	17	16	14	13	12	10	8	7	6	6	5
11-20 PSF	B	0 to 6 Degrees	1	73	65	58	52	47	42	35	30	26	22	20	17
			2	51	45	41	37	33	30	25	21	18	16	14	12
			3	35	31	28	25	23	21	18	15	13	11	10	9
		7 to 27 Degrees	1	58	52	46	42	38	34	29	25	21	18	16	14
			2	37	33	30	27	24	22	19	16	14	12	10	9
			3	30	27	24	22	20	18	15	13	11	10	9	8
		28 to 45 Degrees	1	59	53	48	44	40	36	31	26	23	20	18	16
			2	53	48	43	39	36	33	28	24	20	18	16	14
			3	32	29	26	24	22	20	17	14	13	11	10	9
	C	0 to 6 Degrees	1	49	44	39	35	32	29	24	21	18	15	14	12
			2	35	31	28	25	23	21	17	15	13	11	10	9
			3	24	22	19	18	16	15	12	10	9	8	7	6
		7 to 27 Degrees	1	40	35	32	29	26	24	20	17	15	13	11	10
			2	25	23	21	19	17	15	13	11	10	8	7	6
			3	21	19	17	15	14	13	11	9	8	7	6	5
		28 to 45 Degrees	1	42	37	34	31	28	26	22	19	16	14	12	11
			2	37	33	30	27	25	23	19	17	14	13	11	10
			3	23	21	19	17	15	14	12	10	9	8	7	6
	D	0 to 6 Degrees	1	40	36	32	29	26	24	20	17	15	13	11	10
			2	29	26	23	21	19	17	15	12	11	9	8	7
			3	20	18	16	15	13	12	10	9	7	6	6	5
		7 to 27 Degrees	1	33	29	26	24	22	20	17	14	12	11	9	8
			2	21	19	17	15	14	13	11	9	8	7	6	5
			3	17	16	14	13	12	11	9	8	7	6	5	4
		28 to 45 Degrees	1	35	31	28	26	23	21	18	16	13	12	10	9
			2	31	28	25	23	21	19	16	14	12	11	9	8
			3	19	17	16	14	13	12	10	8	7	6	6	5

Note: See SML "Roof Area" conversion chart and associated ASCE 7-16 Roof Zones on pages 4-10.

Gable Roof RT3

RT-[E] Mount Mini Plywood Only Installations
(60 Cell PV Panels)
Maximum Mount Spacing in Inches

Portrait Orientation - ASCE 7-16

Snow Load	Exposure Category	Roof Angle	Roof Area	Basic Wind Speed, V (mph) 95	100	105	110	115	120	130	140	150	160	170	180
21-30 PSF	B	0 to 6 Degrees	1	69	65	58	52	47	42	35	30	26	22	20	17
			2	51	45	41	37	33	30	25	21	18	16	14	12
			3	35	31	28	25	23	21	18	15	13	11	10	9
		7 to 27 Degrees	1	56	52	46	42	38	34	29	25	21	18	16	14
			2	37	33	30	27	24	22	19	16	14	12	10	9
			3	30	27	24	22	20	18	15	13	11	10	9	8
		28 to 45 Degrees	1	59	53	48	44	40	36	31	26	23	20	18	16
			2	53	48	43	39	36	33	28	24	20	18	16	14
			3	32	29	26	24	22	20	17	14	13	11	10	9
	C	0 to 6 Degrees	1	49	44	39	35	32	29	24	21	18	15	14	12
			2	35	31	28	25	23	21	17	15	13	11	10	9
			3	24	22	19	18	16	15	12	10	9	8	7	6
		7 to 27 Degrees	1	40	35	32	29	26	24	20	17	15	13	11	10
			2	25	23	21	19	17	15	13	11	10	8	7	6
			3	21	19	17	15	14	13	11	9	8	7	6	5
		28 to 45 Degrees	1	42	37	34	31	28	26	22	19	16	14	12	11
			2	37	33	30	27	25	23	19	17	14	13	11	10
			3	23	21	19	17	15	14	12	10	9	8	7	6
	D	0 to 6 Degrees	1	40	36	32	29	26	24	20	17	15	13	11	10
			2	29	26	23	21	19	17	15	12	11	9	8	7
			3	20	18	16	15	13	12	10	9	7	6	6	5
		7 to 27 Degrees	1	33	29	26	24	22	20	17	14	12	11	9	8
			2	21	19	17	15	14	13	11	9	8	7	6	5
			3	17	16	14	13	12	11	9	8	7	6	5	4
		28 to 45 Degrees	1	35	31	28	26	23	21	18	16	13	12	10	9
			2	31	28	25	23	21	19	16	14	12	11	9	8
			3	19	17	16	14	13	12	10	8	7	6	6	5
31-40 PSF	B	0 to 6 Degrees	1	54	54	54	52	47	42	35	30	26	22	20	17
			2	51	45	41	37	33	30	25	21	18	16	14	12
			3	35	31	28	25	23	21	18	15	13	11	10	9
		7 to 27 Degrees	1	43	43	43	42	38	34	29	25	21	18	16	14
			2	37	33	30	27	24	22	19	16	14	12	10	9
			3	30	27	24	22	20	18	15	13	11	10	9	8
		28 to 45 Degrees	1	53	53	48	44	40	36	31	26	23	20	18	16
			2	53	48	43	39	36	33	28	24	20	18	16	14
			3	32	29	26	24	22	20	17	14	13	11	10	9
	C	0 to 6 Degrees	1	49	44	39	35	32	29	24	21	18	15	14	12
			2	35	31	28	25	23	21	17	15	13	11	10	9
			3	24	22	19	18	16	15	12	10	9	8	7	6
		7 to 27 Degrees	1	40	35	32	29	26	24	20	17	15	13	11	10
			2	25	23	21	19	17	15	13	11	10	8	7	6
			3	21	19	17	15	14	13	11	9	8	7	6	5
		28 to 45 Degrees	1	42	37	34	31	28	26	22	19	16	14	12	11
			2	37	33	30	27	25	23	19	17	14	13	11	10
			3	23	21	19	17	15	14	12	10	9	8	7	6
	D	0 to 6 Degrees	1	40	36	32	29	26	24	20	17	15	13	11	10
			2	29	26	23	21	19	17	15	12	11	9	8	7
			3	20	18	16	15	13	12	10	9	7	6	6	5
		7 to 27 Degrees	1	33	29	26	24	22	20	17	14	12	11	9	8
			2	21	19	17	15	14	13	11	9	8	7	6	5
			3	17	16	14	13	12	11	9	8	7	6	5	4
		28 to 45 Degrees	1	35	31	28	26	23	21	18	16	13	12	10	9
			2	31	28	25	23	21	19	16	14	12	11	9	8
			3	19	17	16	14	13	12	10	8	7	6	6	5
41-50 PSF	B	0 to 6 Degrees	1	44	44	44	44	44	42	35	30	26	22	20	17
			2	44	44	41	37	33	30	25	21	18	16	14	12
			3	35	31	28	25	23	21	18	15	13	11	10	9
		7 to 27 Degrees	1	35	35	35	35	35	34	29	25	21	18	16	14
			2	35	33	30	27	24	22	19	16	14	12	10	9
			3	30	27	24	22	20	18	15	13	11	10	9	8
		28 to 45 Degrees	1	44	44	44	44	40	36	31	26	23	20	18	16
			2	44	44	43	39	36	33	28	24	20	18	16	14
			3	32	29	26	24	22	20	17	14	13	11	10	9
	C	0 to 6 Degrees	1	44	44	39	35	32	29	24	21	18	15	14	12
			2	35	31	28	25	23	21	17	15	13	11	10	9
			3	24	22	19	18	16	15	12	10	9	8	7	6
		7 to 27 Degrees	1	35	35	32	29	26	24	20	17	15	13	11	10
			2	25	23	21	19	17	15	13	11	10	8	7	6
			3	21	19	17	15	14	13	11	9	8	7	6	5
		28 to 45 Degrees	1	42	37	34	31	28	26	22	19	16	14	12	11
			2	37	33	30	27	25	23	19	17	14	13	11	10
			3	23	21	19	17	15	14	12	10	9	8	7	6
	D	0 to 6 Degrees	1	40	36	32	29	26	24	20	17	15	13	11	10
			2	29	26	23	21	19	17	15	12	11	9	8	7
			3	20	18	16	15	13	12	10	9	7	6	6	5
		7 to 27 Degrees	1	33	29	26	24	22	20	17	14	12	11	9	8
			2	21	19	17	15	14	13	11	9	8	7	6	5
			3	17	16	14	13	12	11	9	8	7	6	5	4
		28 to 45 Degrees	1	35	31	28	26	23	21	18	16	13	12	10	9
			2	31	28	25	23	21	19	16	14	12	11	9	8
			3	19	17	16	14	13	12	10	8	7	6	6	5

Note: See SML "Roof Area" conversion chart and associated ASCE 7-16 Roof Zones on pages 4-10.

Gable Roof RT3	RT-[E] Mount Mini Plywood Only Installations (60 Cell PV Panels) Maximum Mount Spacing in Inches														
Portrait Orientation - ASCE 7-16															
Snow Load	Exposure Category	Roof Angle	Roof Area	Basic Wind Speed, V (mph)											
				95	100	105	110	115	120	130	140	150	160	170	180
51-60 PSF	B	0 to 6 Degrees	1	37	37	37	37	37	37	35	30	26	22	20	17
			2	37	37	37	37	33	30	25	21	18	16	14	12
			3	35	31	28	25	23	21	18	15	13	11	10	9
		7 to 27 Degrees	1	30	30	30	30	30	30	29	25	21	18	16	14
			2	30	30	30	27	24	22	19	16	14	12	10	9
			3	30	27	24	22	20	18	15	13	11	10	9	8
		28 to 45 Degrees	1	38	38	38	38	38	36	31	26	23	20	18	16
			2	38	38	38	38	36	33	28	24	20	18	16	14
			3	32	29	26	24	22	20	17	14	13	11	10	9
	C	0 to 6 Degrees	1	37	37	37	35	32	29	24	21	18	15	14	12
			2	35	31	28	25	23	21	17	15	13	11	10	9
			3	24	22	19	18	16	15	12	10	9	8	7	6
		7 to 27 Degrees	1	30	30	30	29	26	24	20	17	15	13	11	10
			2	25	23	21	19	17	15	13	11	10	8	7	6
			3	21	19	17	15	14	13	11	9	8	7	6	5
		28 to 45 Degrees	1	38	37	34	31	28	26	22	19	16	14	12	11
			2	37	33	30	27	25	23	19	17	14	13	11	10
			3	23	21	19	17	15	14	12	10	9	8	7	6
	D	0 to 6 Degrees	1	37	36	32	29	32	24	20	17	15	13	11	10
			2	29	26	23	21	19	17	15	12	11	9	8	7
			3	20	18	16	15	13	12	10	9	7	6	6	5
		7 to 27 Degrees	1	30	29	26	24	22	20	17	14	12	11	9	8
			2	21	19	17	15	14	13	11	9	8	7	6	5
			3	17	16	14	13	12	11	9	8	7	6	5	4
		28 to 45 Degrees	1	35	31	28	26	23	21	18	16	13	12	10	9
			2	31	28	25	23	21	19	16	14	12	11	9	8
			3	19	17	16	14	13	12	10	8	7	6	6	5
61-70 PSF	B	0 to 6 Degrees	1	32	32	32	32	32	32	32	30	26	22	20	17
			2	32	32	32	32	32	30	25	21	18	16	14	12
			3	32	31	28	25	23	21	18	15	13	11	10	9
		7 to 27 Degrees	1	26	26	26	26	26	26	26	25	21	18	16	14
			2	26	26	26	26	24	22	19	16	14	12	10	9
			3	26	26	24	22	20	18	15	13	11	10	9	8
		28 to 45 Degrees	1	33	33	33	33	33	33	31	26	23	20	18	16
			2	33	33	33	33	33	33	28	24	20	18	16	14
			3	32	29	26	24	22	20	17	14	13	11	10	9
	C	0 to 6 Degrees	1	32	32	32	32	32	29	24	21	18	15	14	12
			2	32	31	28	25	23	21	17	15	13	11	10	9
			3	24	22	19	18	16	15	12	10	9	8	7	6
		7 to 27 Degrees	1	26	26	26	26	26	24	20	17	15	13	11	10
			2	25	23	21	19	17	15	13	11	10	8	7	6
			3	21	19	17	15	14	13	11	9	8	7	6	5
		28 to 45 Degrees	1	33	33	33	31	28	26	22	19	16	14	12	11
			2	33	33	30	27	25	23	19	17	14	13	11	10
			3	23	21	19	17	15	14	12	10	9	8	7	6
	D	0 to 6 Degrees	1	32	32	32	29	26	24	20	17	15	13	11	10
			2	29	26	23	21	19	17	15	12	11	9	8	7
			3	20	18	16	15	13	12	10	9	7	6	6	5
		7 to 27 Degrees	1	26	26	26	24	22	20	17	14	12	11	9	8
			2	21	19	17	15	14	13	11	9	8	7	6	5
			3	17	16	14	13	12	11	9	8	7	6	5	4
		28 to 45 Degrees	1	33	31	28	26	23	21	18	16	13	12	10	9
			2	31	28	25	23	21	19	16	14	12	11	9	8
			3	19	17	16	14	13	12	10	8	7	6	6	5

Note: See SML "Roof Area" conversion chart and associated ASCE 7-16 Roof Zones on pages 4-10.

Gable Roof RT4

RT-[E] Mount Mini Plywood Only Installations
(72 Cell PV Panels)
Maximum Mount Spacing in Inches

Portrait Orientation - ASCE 7-16

Snow Load	Exposure Category	Roof Angle	Roof Area	Basic Wind Speed, V (mph) 95	100	105	110	115	120	130	140	150	160	170	180
0 PSF	B	0 to 6 Degrees	1	64	57	50	45	41	37	31	26	22	19	17	15
			2	45	40	36	32	29	26	22	19	16	14	12	11
			3	31	27	25	22	20	18	15	13	11	10	9	8
		7 to 27 Degrees	1	51	45	40	36	33	30	25	22	19	16	14	13
			2	32	29	26	23	21	19	16	14	12	10	9	8
			3	26	23	21	19	17	16	13	11	10	9	7	7
		28 to 45 Degrees	1	52	47	42	38	35	32	27	23	20	17	15	14
			2	47	42	38	34	31	29	24	21	18	16	14	12
			3	28	26	23	21	19	17	15	13	11	10	8	7
	C	0 to 6 Degrees	1	43	38	34	31	28	25	21	18	16	13	12	10
			2	30	27	24	22	20	18	15	13	11	10	9	8
			3	21	19	17	15	14	13	11	9	8	7	6	5
		7 to 27 Degrees	1	35	31	28	25	23	21	18	15	13	11	10	9
			2	22	20	18	16	15	13	11	10	8	7	6	6
			3	18	16	15	13	12	11	9	8	7	6	5	5
		28 to 45 Degrees	1	36	33	30	27	24	22	19	16	14	12	11	10
			2	33	29	26	24	22	20	17	15	13	11	10	9
			3	20	18	16	15	13	12	10	9	8	7	6	5
	D	0 to 6 Degrees	1	35	32	28	25	23	21	18	15	13	11	10	9
			2	25	23	20	18	17	15	13	11	9	8	7	6
			3	18	16	14	13	12	11	9	8	6	6	5	4
		7 to 27 Degrees	1	29	26	23	21	19	17	15	12	11	9	8	7
			2	19	17	15	14	12	11	9	8	7	6	5	5
			3	15	14	12	11	10	9	8	7	6	5	4	4
		28 to 45 Degrees	1	31	27	25	23	21	19	16	14	12	10	9	8
			2	27	25	22	20	18	17	14	12	11	9	8	7
			3	17	15	14	12	11	10	9	7	6	6	5	4
1-10 PSF	B	0 to 6 Degrees	1	64	57	50	45	41	37	31	26	22	19	17	15
			2	45	40	36	32	29	26	22	19	16	14	12	11
			3	31	27	25	22	20	18	15	13	11	10	9	8
		7 to 27 Degrees	1	51	45	40	36	33	30	25	22	19	16	14	13
			2	32	29	26	23	21	19	16	14	12	10	9	8
			3	26	23	21	19	17	16	13	11	10	9	7	7
		28 to 45 Degrees	1	52	47	42	38	35	32	27	23	20	17	15	14
			2	47	42	38	34	31	29	24	21	18	16	14	12
			3	28	26	23	21	19	17	15	13	11	10	8	7
	C	0 to 6 Degrees	1	43	38	34	31	28	25	21	18	16	13	12	10
			2	30	27	24	22	20	18	15	13	11	10	9	8
			3	21	19	17	15	14	13	11	9	8	7	6	5
		7 to 27 Degrees	1	35	31	28	25	23	21	18	15	13	11	10	9
			2	22	20	18	16	15	13	11	10	8	7	6	6
			3	18	16	15	13	12	11	9	8	7	6	5	5
		28 to 45 Degrees	1	36	33	30	27	24	22	19	16	14	12	11	10
			2	33	29	26	24	22	20	17	15	13	11	10	9
			3	20	18	16	15	13	12	10	9	8	7	6	5
	D	0 to 6 Degrees	1	35	32	28	25	23	21	18	15	13	11	10	9
			2	25	23	20	18	17	15	13	11	9	8	7	6
			3	18	16	14	13	12	11	9	8	6	6	5	4
		7 to 27 Degrees	1	29	26	23	21	19	17	15	12	11	9	8	7
			2	19	17	15	14	12	11	9	8	7	6	5	5
			3	15	14	12	11	10	9	8	7	6	5	4	4
		28 to 45 Degrees	1	31	27	25	23	21	19	16	14	12	10	9	8
			2	27	25	22	20	18	17	14	12	11	9	8	7
			3	17	15	14	12	11	10	9	7	6	6	5	4
11-20 PSF	B	0 to 6 Degrees	1	64	57	50	45	41	37	31	26	22	19	17	15
			2	45	40	36	32	29	26	22	19	16	14	12	11
			3	31	27	25	22	20	18	15	13	11	10	9	8
		7 to 27 Degrees	1	51	45	40	36	33	30	25	22	19	16	14	13
			2	32	29	26	23	21	19	16	14	12	10	9	8
			3	26	23	21	19	17	16	13	11	10	9	7	7
		28 to 45 Degrees	1	52	47	42	38	35	32	27	23	20	17	15	14
			2	47	42	38	34	31	29	24	21	18	16	14	12
			3	28	26	23	21	19	17	15	13	11	10	8	7
	C	0 to 6 Degrees	1	43	38	34	31	28	25	21	18	16	13	12	10
			2	30	27	24	22	20	18	15	13	11	10	9	8
			3	21	19	17	15	14	13	11	9	8	7	6	5
		7 to 27 Degrees	1	35	31	28	25	23	21	18	15	13	11	10	9
			2	22	20	18	16	15	13	11	10	8	7	6	6
			3	18	16	15	13	12	11	9	8	7	6	5	5
		28 to 45 Degrees	1	36	33	30	27	24	22	19	16	14	12	11	10
			2	33	29	26	24	22	20	17	15	13	11	10	9
			3	20	18	16	15	13	12	10	9	8	7	6	5
	D	0 to 6 Degrees	1	35	32	28	25	23	21	18	15	13	11	10	9
			2	25	23	20	18	17	15	13	11	9	8	7	6
			3	18	16	14	13	12	11	9	8	6	6	5	4
		7 to 27 Degrees	1	29	26	23	21	19	17	15	12	11	9	8	7
			2	19	17	15	14	12	11	9	8	7	6	5	5
			3	15	14	12	11	10	9	8	7	6	5	4	4
		28 to 45 Degrees	1	31	27	25	23	21	19	16	14	12	10	9	8
			2	27	25	22	20	18	17	14	12	11	9	8	7
			3	17	15	14	12	11	10	9	7	6	6	5	4

Note: See SML "Roof Area" conversion chart and associated ASCE 7-16 Roof Zones on pages 4-10.

Gable Roof RT4

RT-[E] Mount Mini Plywood Only Installations
(72 Cell PV Panels)
Maximum Mount Spacing in Inches

Portrait Orientation - ASCE 7-16

Snow Load	Exposure Category	Roof Angle	Roof Area	Basic Wind Speed, V (mph) 95	100	105	110	115	120	130	140	150	160	170	180
21-30 PSF	B	0 to 6 Degrees	1	61	57	50	45	41	37	31	26	22	19	17	15
			2	45	40	36	32	29	26	22	19	16	14	12	11
			3	31	27	25	22	20	18	15	13	11	10	9	8
		7 to 27 Degrees	1	49	45	40	36	33	30	25	22	19	16	14	13
			2	32	29	26	23	21	19	16	14	12	10	9	8
			3	26	23	21	19	17	16	13	11	10	9	7	7
		28 to 45 Degrees	1	52	47	42	38	35	32	27	23	20	17	15	14
			2	47	42	38	34	31	29	24	21	18	16	14	12
			3	28	26	23	21	19	17	15	13	11	10	8	7
	C	0 to 6 Degrees	1	43	38	34	31	28	25	21	18	16	13	12	10
			2	30	27	24	22	20	18	15	13	11	10	9	8
			3	21	19	17	15	14	13	11	9	8	7	6	5
		7 to 27 Degrees	1	35	31	28	25	23	21	18	15	13	11	10	9
			2	22	20	18	16	15	13	11	10	8	7	6	6
			3	18	16	15	13	12	11	9	8	7	6	5	5
		28 to 45 Degrees	1	36	33	30	27	24	22	19	16	14	12	11	10
			2	33	29	26	24	22	20	17	15	13	11	10	9
			3	20	18	16	15	13	12	10	9	8	7	6	5
	D	0 to 6 Degrees	1	35	32	28	25	23	21	18	15	13	11	10	9
			2	25	23	20	18	17	15	13	11	9	8	7	6
			3	18	16	14	13	12	11	9	8	6	6	5	4
		7 to 27 Degrees	1	29	26	23	21	19	17	15	12	11	9	8	7
			2	19	17	15	14	12	11	9	8	7	6	5	5
			3	15	14	12	11	10	9	8	7	6	5	4	4
		28 to 45 Degrees	1	31	27	25	23	21	19	16	14	12	10	9	8
			2	27	25	22	20	18	17	14	12	11	9	8	7
			3	17	15	14	12	11	10	9	7	6	6	5	4
31-40 PSF	B	0 to 6 Degrees	1	47	47	47	45	41	37	31	26	22	19	17	15
			2	45	40	36	32	29	26	22	19	16	14	12	11
			3	31	27	25	22	20	18	15	13	11	10	9	8
		7 to 27 Degrees	1	38	38	38	36	33	30	25	22	19	16	14	13
			2	32	29	26	23	21	19	16	14	12	10	9	8
			3	26	23	21	19	17	16	13	11	10	9	7	7
		28 to 45 Degrees	1	47	47	42	38	35	32	27	23	20	17	15	14
			2	47	42	38	34	31	29	24	21	18	16	14	12
			3	28	26	23	21	19	17	15	13	11	10	8	7
	C	0 to 6 Degrees	1	43	38	34	31	28	25	21	18	16	13	12	10
			2	30	27	24	22	20	18	15	13	11	10	9	8
			3	21	19	17	15	14	13	11	9	8	7	6	5
		7 to 27 Degrees	1	35	31	28	25	23	21	18	15	13	11	10	9
			2	22	20	18	16	15	13	11	10	8	7	6	6
			3	18	16	15	13	12	11	9	8	7	6	5	5
		28 to 45 Degrees	1	36	33	30	27	24	22	19	16	14	12	11	10
			2	33	29	26	24	22	20	17	15	13	11	10	9
			3	20	18	16	15	13	12	10	9	8	7	6	5
	D	0 to 6 Degrees	1	35	32	28	25	23	21	18	15	13	11	10	9
			2	25	23	20	18	17	15	13	11	9	8	7	6
			3	18	16	14	13	12	11	9	8	6	6	5	4
		7 to 27 Degrees	1	29	26	23	21	19	17	15	12	11	9	8	7
			2	19	17	15	14	12	11	9	8	7	6	5	5
			3	15	14	12	11	10	9	8	7	6	5	4	4
		28 to 45 Degrees	1	31	27	25	23	21	19	16	14	12	10	9	8
			2	27	25	22	20	18	17	14	12	11	9	8	7
			3	17	15	14	12	11	10	9	7	6	6	5	4
41-50 PSF	B	0 to 6 Degrees	1	38	38	38	38	38	37	31	26	22	19	17	15
			2	38	38	36	32	29	26	22	19	16	14	12	11
			3	31	27	25	22	20	18	15	13	11	10	9	8
		7 to 27 Degrees	1	31	31	31	31	31	30	25	22	19	16	14	13
			2	31	29	26	23	21	19	16	14	12	10	9	8
			3	26	23	21	19	17	16	13	11	10	9	7	7
		28 to 45 Degrees	1	39	39	39	38	35	32	27	23	20	17	15	14
			2	39	39	38	34	31	29	24	21	18	16	14	12
			3	28	26	23	21	19	17	15	13	11	10	8	7
	C	0 to 6 Degrees	1	38	38	34	31	28	25	21	18	16	13	12	10
			2	30	27	24	22	20	18	15	13	11	10	9	8
			3	21	19	17	15	14	13	11	9	8	7	6	5
		7 to 27 Degrees	1	31	31	28	25	23	21	18	15	13	11	10	9
			2	22	20	18	16	15	13	11	10	8	7	6	6
			3	18	16	15	13	12	11	9	8	7	6	5	5
		28 to 45 Degrees	1	36	33	30	27	24	22	19	16	14	12	11	10
			2	33	29	26	24	22	20	17	15	13	11	10	9
			3	20	18	16	15	13	12	10	9	8	7	6	5
	D	0 to 6 Degrees	1	35	32	28	25	23	21	18	15	13	11	10	9
			2	25	23	20	18	17	15	13	11	9	8	7	6
			3	18	16	14	13	12	11	9	8	6	6	5	4
		7 to 27 Degrees	1	29	26	23	21	19	17	15	12	11	9	8	7
			2	19	17	15	14	12	11	9	8	7	6	5	5
			3	15	14	12	11	10	9	8	7	6	5	4	4
		28 to 45 Degrees	1	31	27	25	23	21	19	16	14	12	10	9	8
			2	27	25	22	20	18	17	14	12	11	9	8	7
			3	17	15	14	12	11	10	9	7	6	6	5	4

Note: See SML "Roof Area" conversion chart and associated ASCE 7-16 Roof Zones on pages 4-10.

Gable Roof RT4

RT-[E] Mount Mini Plywood Only Installations
(72 Cell PV Panels)
Maximum Mount Spacing in Inches

Portrait Orientation - ASCE 7-16

Snow Load	Exposure Category	Roof Angle	Roof Area	Basic Wind Speed, V (mph) 95	100	105	110	115	120	130	140	150	160	170	180
51-60 PSF	B	0 to 6 Degrees	1	32	32	32	32	32	32	31	26	22	19	17	15
			2	32	32	32	32	29	26	22	19	16	14	12	11
			3	31	27	25	22	20	18	15	13	11	10	9	8
		7 to 27 Degrees	1	26	26	26	26	26	26	25	22	19	16	14	13
			2	26	26	26	23	21	19	16	14	12	10	9	8
			3	26	23	21	19	17	16	13	11	10	9	7	7
		28 to 45 Degrees	1	33	33	33	33	33	32	27	23	20	17	15	14
			2	33	33	33	33	31	29	24	21	18	16	14	12
			3	28	26	23	21	19	17	15	13	11	10	8	7
	C	0 to 6 Degrees	1	32	32	32	31	28	25	21	18	16	13	12	10
			2	30	27	24	22	20	18	15	13	11	10	9	8
			3	21	19	17	15	14	13	11	9	8	7	6	5
		7 to 27 Degrees	1	26	26	26	25	23	21	18	15	13	11	10	9
			2	22	20	18	16	15	13	11	10	8	7	6	6
			3	18	16	15	13	12	11	9	8	7	6	5	5
		28 to 45 Degrees	1	33	33	30	27	24	22	19	16	14	12	11	10
			2	33	29	26	24	22	20	17	15	13	11	10	9
			3	20	18	16	15	13	12	10	9	8	7	6	5
	D	0 to 6 Degrees	1	32	32	28	25	28	21	18	15	13	11	10	9
			2	25	23	20	18	17	15	13	11	9	8	7	6
			3	18	16	14	13	12	11	9	8	6	6	5	4
		7 to 27 Degrees	1	26	26	23	21	19	17	15	12	11	9	8	7
			2	19	17	15	14	12	11	9	8	7	6	5	5
			3	15	14	12	11	10	9	8	7	6	5	4	4
		28 to 45 Degrees	1	31	27	25	23	21	19	16	14	12	10	9	8
			2	27	25	22	20	18	17	14	12	11	9	8	7
			3	17	15	14	12	11	10	9	7	6	6	5	4
61-70 PSF	B	0 to 6 Degrees	1	28	28	28	28	28	28	28	26	22	19	17	15
			2	28	28	28	28	28	26	22	19	16	14	12	11
			3	28	27	25	22	20	18	15	13	11	10	9	8
		7 to 27 Degrees	1	23	23	23	23	23	23	23	22	19	16	14	13
			2	23	23	23	23	21	19	16	14	12	10	9	8
			3	23	23	21	19	17	16	13	11	10	9	7	7
		28 to 45 Degrees	1	29	29	29	29	29	29	27	23	20	17	15	14
			2	29	29	29	29	29	29	24	21	18	16	14	12
			3	28	26	23	21	19	17	15	13	11	10	8	7
	C	0 to 6 Degrees	1	28	28	28	28	28	25	21	18	16	13	12	10
			2	28	27	24	22	20	18	15	13	11	10	9	8
			3	21	19	17	15	14	13	11	9	8	7	6	5
		7 to 27 Degrees	1	23	23	23	23	23	21	18	15	13	11	10	9
			2	22	20	18	16	15	13	11	10	8	7	6	6
			3	18	16	15	13	12	11	9	8	7	6	5	5
		28 to 45 Degrees	1	29	29	29	27	24	22	19	16	14	12	11	10
			2	29	29	26	24	22	20	17	15	13	11	10	9
			3	20	18	16	15	13	12	10	9	8	7	6	5
	D	0 to 6 Degrees	1	28	28	28	25	23	21	18	15	13	11	10	9
			2	25	23	20	18	17	15	13	11	9	8	7	6
			3	18	16	14	13	12	11	9	8	6	6	5	4
		7 to 27 Degrees	1	23	23	23	21	19	17	15	12	11	9	8	7
			2	19	17	15	14	12	11	9	8	7	6	5	5
			3	15	14	12	11	10	9	8	7	6	5	4	4
		28 to 45 Degrees	1	29	27	25	23	21	19	16	14	12	10	9	8
			2	27	25	22	20	18	17	14	12	11	9	8	7
			3	17	15	14	12	11	10	9	7	6	6	5	4

Note: See SML "Roof Area" conversion chart and associated ASCE 7-16 Roof Zones on pages 4-10.

Gable Roof RT5

RT-[E] Mount Mini OSB Only Installations
(60 Cell PV Panels)
Maximum Mount Spacing in Inches

Portrait Orientation - ASCE 7-16

Snow Load	Exposure Category	Roof Angle	Roof Area	Basic Wind Speed, V (mph) 95	100	105	110	115	120	130	140	150	160	170	180
0 PSF	B	0 to 6 Degrees	1	62	55	49	44	39	36	30	25	22	19	16	15
			2	43	38	34	31	28	25	21	18	16	14	12	10
			3	30	26	24	21	19	18	15	13	11	9	8	7
		7 to 27 Degrees	1	49	43	39	35	32	29	24	21	18	16	14	12
			2	31	28	25	22	20	19	16	13	12	10	9	8
			3	25	22	20	18	17	15	13	11	9	8	7	6
		28 to 45 Degrees	1	49	44	40	36	33	30	26	22	19	17	15	13
			2	44	40	36	33	30	27	23	20	17	15	13	12
			3	27	24	22	20	18	17	14	12	11	9	8	7
	C	0 to 6 Degrees	1	41	37	33	30	27	24	20	17	15	13	11	10
			2	29	26	23	21	19	18	15	13	11	9	8	7
			3	20	18	16	15	13	12	10	9	8	7	6	5
		7 to 27 Degrees	1	33	30	27	24	22	20	17	14	12	11	9	8
			2	21	19	17	16	14	13	11	9	8	7	6	5
			3	17	16	14	13	12	11	9	8	7	6	5	4
		28 to 45 Degrees	1	35	31	28	26	23	21	18	16	13	12	10	9
			2	31	28	25	23	21	19	16	14	12	11	9	8
			3	19	17	16	14	13	12	10	9	7	6	6	5
	D	0 to 6 Degrees	1	34	30	27	25	22	20	17	14	12	11	9	8
			2	24	22	20	18	16	15	12	10	9	8	7	6
			3	17	15	14	12	11	10	9	7	6	5	5	4
		7 to 27 Degrees	1	28	25	22	20	18	17	14	12	10	9	8	7
			2	18	16	14	13	12	11	9	8	7	6	5	4
			3	15	13	12	11	10	9	7	6	5	5	4	4
		28 to 45 Degrees	1	29	26	24	22	20	18	15	13	11	10	9	8
			2	26	24	21	19	18	16	14	12	10	9	8	7
			3	16	14	13	12	11	10	8	7	6	5	5	4
1-10 PSF	B	0 to 6 Degrees	1	54	54	49	44	39	36	30	25	22	19	16	15
			2	43	38	34	31	28	25	21	18	16	14	12	10
			3	30	26	24	21	19	18	15	13	11	9	8	7
		7 to 27 Degrees	1	49	43	39	35	32	29	24	21	18	16	14	12
			2	31	28	25	22	20	19	16	13	12	10	9	8
			3	25	22	20	18	17	15	13	11	9	8	7	6
		28 to 45 Degrees	1	49	44	40	36	33	30	26	22	19	17	15	13
			2	44	40	36	33	30	27	23	20	17	15	13	12
			3	27	24	22	20	18	17	14	12	11	9	8	7
	C	0 to 6 Degrees	1	41	37	33	30	27	24	20	17	15	13	11	10
			2	29	26	23	21	19	18	15	13	11	9	8	7
			3	20	18	16	15	13	12	10	9	8	7	6	5
		7 to 27 Degrees	1	33	30	27	24	22	20	17	14	12	11	9	8
			2	21	19	17	16	14	13	11	9	8	7	6	5
			3	17	16	14	13	12	11	9	8	7	6	5	4
		28 to 45 Degrees	1	35	31	28	26	23	21	18	16	13	12	10	9
			2	31	28	25	23	21	19	16	14	12	11	9	8
			3	19	17	16	14	13	12	10	9	7	6	6	5
	D	0 to 6 Degrees	1	34	30	27	25	22	20	17	14	12	11	9	8
			2	24	22	20	18	16	15	12	10	9	8	7	6
			3	17	15	14	12	11	10	9	7	6	5	5	4
		7 to 27 Degrees	1	28	25	22	20	18	17	14	12	10	9	8	7
			2	18	16	14	13	12	11	9	8	7	6	5	4
			3	15	13	12	11	10	9	7	6	5	5	4	4
		28 to 45 Degrees	1	29	26	24	22	20	18	15	13	11	10	9	8
			2	26	24	21	19	18	16	14	12	10	9	8	7
			3	16	14	13	12	11	10	8	7	6	5	5	4
11-20 PSF	B	0 to 6 Degrees	1	38	38	38	38	38	36	30	25	22	19	16	15
			2	38	38	34	31	28	25	21	18	16	14	12	10
			3	30	26	24	21	19	18	15	13	11	9	8	7
		7 to 27 Degrees	1	34	34	34	34	32	29	24	21	18	16	14	12
			2	31	28	25	22	20	19	16	13	12	10	9	8
			3	25	22	20	18	17	15	13	11	9	8	7	6
		28 to 45 Degrees	1	41	41	40	36	33	30	26	22	19	17	15	13
			2	41	40	36	33	30	27	23	20	17	15	13	12
			3	27	24	22	20	18	17	14	12	11	9	8	7
	C	0 to 6 Degrees	1	38	37	33	30	27	24	20	17	15	13	11	10
			2	29	26	23	21	19	18	15	13	11	9	8	7
			3	20	18	16	15	13	12	10	9	8	7	6	5
		7 to 27 Degrees	1	33	30	27	24	22	20	17	14	12	11	9	8
			2	21	19	17	16	14	13	11	9	8	7	6	5
			3	17	16	14	13	12	11	9	8	7	6	5	4
		28 to 45 Degrees	1	35	31	28	26	23	21	18	16	13	12	10	9
			2	31	28	25	23	21	19	16	14	12	11	9	8
			3	19	17	16	14	13	12	10	9	7	6	6	5
	D	0 to 6 Degrees	1	34	30	27	25	22	20	17	14	12	11	9	8
			2	24	22	20	18	16	15	12	10	9	8	7	6
			3	17	15	14	12	11	10	9	7	6	5	5	4
		7 to 27 Degrees	1	28	25	22	20	18	17	14	12	10	9	8	7
			2	18	16	14	13	12	11	9	8	7	6	5	4
			3	15	13	12	11	10	9	7	6	5	5	4	4
		28 to 45 Degrees	1	29	26	24	22	20	18	15	13	11	10	9	8
			2	26	24	21	19	18	16	14	12	10	9	8	7
			3	16	14	13	12	11	10	8	7	6	5	5	4

Note: See SML "Roof Area" conversion chart and associated ASCE 7-16 Roof Zones on pages 4-10.

Gable Roof RT5	RT-[E] Mount Mini OSB Only Installations (60 Cell PV Panels) Maximum Mount Spacing in Inches														
Portrait Orientation - ASCE 7-16															
Snow Load	Exposure Category	Roof Angle	Roof Area	Basic Wind Speed, V (mph) 95	100	105	110	115	120	130	140	150	160	170	180
21-30 PSF	B	0 to 6 Degrees	1	33	33	33	33	33	33	30	25	22	19	16	15
			2	33	33	33	31	28	25	21	18	16	14	12	10
			3	30	26	24	21	19	18	15	13	11	9	8	7
		7 to 27 Degrees	1	29	29	29	29	29	29	24	21	18	16	14	12
			2	29	28	25	22	20	19	16	13	12	10	9	8
			3	25	22	20	18	17	15	13	11	9	8	7	6
		28 to 45 Degrees	1	36	36	36	36	33	30	26	22	19	17	15	13
			2	36	36	36	33	30	27	23	20	17	15	13	12
			3	27	24	22	20	18	17	14	12	11	9	8	7
	C	0 to 6 Degrees	1	33	33	33	30	27	24	20	17	15	13	11	10
			2	29	26	23	21	19	18	15	13	11	9	8	7
			3	20	18	16	15	13	12	10	9	8	7	6	5
		7 to 27 Degrees	1	29	29	27	24	22	20	17	14	12	11	9	8
			2	21	19	17	16	14	13	11	9	8	7	6	5
			3	17	16	14	13	12	11	9	8	7	6	5	4
		28 to 45 Degrees	1	35	31	28	26	23	21	18	16	13	12	10	9
			2	31	28	25	23	21	19	16	14	12	11	9	8
			3	19	17	16	14	13	12	10	9	7	6	6	5
	D	0 to 6 Degrees	1	33	30	27	25	22	20	17	14	12	11	9	8
			2	24	22	20	18	16	15	12	10	9	8	7	6
			3	17	15	14	12	11	10	9	7	6	5	5	4
		7 to 27 Degrees	1	28	25	22	20	18	17	14	12	10	9	8	7
			2	18	16	14	13	12	11	9	8	7	6	5	4
			3	15	13	12	11	10	9	7	6	5	5	4	4
		28 to 45 Degrees	1	29	26	24	22	20	18	15	13	11	10	9	8
			2	26	24	21	19	18	16	14	12	10	9	8	7
			3	16	14	13	12	11	10	8	7	6	5	5	4
31-40 PSF	B	0 to 6 Degrees	1	26	26	26	26	26	26	26	25	22	19	16	15
			2	26	26	26	26	26	25	21	18	16	14	12	10
			3	26	26	24	21	19	18	15	13	11	9	8	7
		7 to 27 Degrees	1	23	23	23	23	23	23	23	21	18	16	14	12
			2	23	23	23	22	20	19	16	13	12	10	9	8
			3	23	22	20	18	17	15	13	11	9	8	7	6
		28 to 45 Degrees	1	30	30	30	30	30	51	26	22	19	17	15	13
			2	30	30	30	30	30	27	23	20	17	15	13	12
			3	27	24	22	20	18	17	14	12	11	9	8	7
	C	0 to 6 Degrees	1	26	26	26	26	26	24	20	17	15	13	11	10
			2	26	26	23	21	19	18	15	13	11	9	8	7
			3	20	18	16	15	13	12	10	9	8	7	6	5
		7 to 27 Degrees	1	23	23	23	23	22	20	17	14	12	11	9	8
			2	21	19	17	16	14	13	11	9	8	7	6	5
			3	17	16	14	13	12	11	9	8	7	6	5	4
		28 to 45 Degrees	1	30	30	28	26	23	21	18	16	13	12	10	9
			2	30	28	25	23	21	19	16	14	12	11	9	8
			3	19	17	16	14	13	12	10	9	7	6	6	5
	D	0 to 6 Degrees	1	26	26	26	25	22	20	17	14	12	11	9	8
			2	24	22	20	18	16	15	12	10	9	8	7	6
			3	17	15	14	12	11	10	9	7	6	5	5	4
		7 to 27 Degrees	1	23	23	22	20	18	17	14	12	10	9	8	7
			2	18	16	14	13	12	11	9	8	7	6	5	4
			3	15	13	12	11	10	9	7	6	5	5	4	4
		28 to 45 Degrees	1	29	26	24	22	20	18	15	13	11	10	9	8
			2	26	24	21	19	18	16	14	12	10	9	8	7
			3	16	14	13	12	11	10	8	7	6	5	5	4
41-50 PSF	B	0 to 6 Degrees	1	21	21	21	21	21	21	21	21	21	19	16	15
			2	21	21	21	21	21	21	21	18	16	14	12	10
			3	21	21	21	21	19	18	15	13	11	9	8	7
		7 to 27 Degrees	1	18	18	18	18	18	18	18	18	18	16	14	12
			2	18	18	18	18	18	18	16	13	12	10	9	8
			3	18	18	18	18	17	15	13	11	9	8	7	6
		28 to 45 Degrees	1	25	25	25	25	25	25	25	22	19	17	15	13
			2	25	25	25	25	25	25	23	20	17	15	13	12
			3	25	24	22	20	18	17	14	12	11	9	8	7
	C	0 to 6 Degrees	1	21	21	21	21	21	21	20	17	15	13	11	10
			2	21	21	21	21	19	18	15	13	11	9	8	7
			3	20	18	16	15	13	12	10	9	8	7	6	5
		7 to 27 Degrees	1	18	18	18	18	18	18	17	14	12	11	9	8
			2	18	18	17	16	14	13	11	9	8	7	6	5
			3	17	16	14	13	12	11	9	8	7	6	5	4
		28 to 45 Degrees	1	25	25	25	25	23	21	18	16	13	12	10	9
			2	25	25	25	23	21	19	16	14	12	11	9	8
			3	19	17	16	14	13	12	10	9	7	6	6	5
	D	0 to 6 Degrees	1	21	21	21	21	21	20	17	14	12	11	9	8
			2	21	21	20	18	16	15	12	10	9	8	7	6
			3	17	15	14	12	11	10	9	7	6	5	5	4
		7 to 27 Degrees	1	18	18	18	18	18	17	14	12	10	9	8	7
			2	18	16	14	13	12	11	9	8	7	6	5	4
			3	15	13	12	11	10	9	7	6	5	5	4	4
		28 to 45 Degrees	1	25	25	24	22	20	18	15	13	11	10	9	8
			2	25	24	21	19	18	16	14	12	10	9	8	7
			3	16	14	13	12	11	10	8	7	6	5	5	4

Note: See SML "Roof Area" conversion chart and associated ASCE 7-16 Roof Zones on pages 4-10.

Gable Roof RT5	RT-[E] Mount Mini OSB Only Installations (60 Cell PV Panels) Maximum Mount Spacing in Inches														
Portrait Orientation - ASCE 7-16															
Snow Load	Exposure Category	Roof Angle	Roof Area	Basic Wind Speed, V (mph)											
				95	100	105	110	115	120	130	140	150	160	170	180
51-60 PSF	B	0 to 6 Degrees	1	18	18	18	18	18	18	18	18	18	18	16	15
			2	18	18	18	18	18	18	18	18	16	14	12	10
			3	18	18	18	18	18	18	15	13	11	9	8	7
		7 to 27 Degrees	1	15	15	15	15	15	15	15	15	15	15	14	12
			2	15	15	15	15	15	15	15	13	12	10	9	8
			3	15	15	15	15	15	15	13	11	9	8	7	6
		28 to 45 Degrees	1	21	21	21	21	21	21	21	21	19	17	15	13
			2	21	21	21	21	21	21	21	20	17	15	13	12
			3	21	21	21	20	18	17	14	12	11	9	8	7
	C	0 to 6 Degrees	1	18	18	18	18	18	18	18	17	15	13	11	10
			2	18	18	18	18	18	18	15	13	11	9	8	7
			3	18	18	16	15	13	12	10	9	8	7	6	5
		7 to 27 Degrees	1	15	15	15	15	15	15	15	14	12	11	9	8
			2	15	15	15	15	14	13	11	9	8	7	6	5
			3	15	15	14	13	12	11	9	8	7	6	5	4
		28 to 45 Degrees	1	21	21	21	21	21	21	18	16	13	12	10	9
			2	21	21	21	21	21	19	16	14	12	11	9	8
			3	19	17	16	14	13	12	10	9	7	6	6	5
	D	0 to 6 Degrees	1	18	18	18	18	18	18	17	14	12	11	9	8
			2	18	18	18	18	16	15	12	10	9	8	7	6
			3	17	15	14	12	11	10	9	7	6	5	5	4
		7 to 27 Degrees	1	15	15	15	15	15	15	14	12	10	9	8	7
			2	15	15	14	13	12	11	9	8	7	6	5	4
			3	15	13	12	11	10	9	7	6	5	5	4	4
		28 to 45 Degrees	1	21	21	21	21	20	18	15	13	11	10	9	8
			2	21	21	21	19	18	16	14	12	10	9	8	7
			3	16	14	13	12	11	10	8	7	6	5	5	4
61-70 PSF	B	0 to 6 Degrees	1	15	15	15	15	15	15	15	15	15	15	15	15
			2	15	15	15	15	15	15	15	15	15	14	12	10
			3	15	15	15	15	15	15	15	13	11	9	8	7
		7 to 27 Degrees	1	13	13	13	13	13	13	13	13	13	13	13	12
			2	13	13	13	13	13	13	13	13	12	10	9	8
			3	13	13	13	13	13	13	13	11	9	8	7	6
		28 to 45 Degrees	1	19	19	19	19	19	19	19	19	19	17	15	13
			2	19	19	19	19	19	19	19	19	17	15	13	12
			3	19	19	19	19	18	17	14	12	11	9	8	7
	C	0 to 6 Degrees	1	15	15	15	15	15	15	15	15	15	13	11	10
			2	15	15	15	15	15	15	15	13	11	9	8	7
			3	15	15	15	15	13	12	10	9	8	7	6	5
		7 to 27 Degrees	1	13	13	13	13	13	13	13	13	12	11	9	8
			2	13	13	13	13	13	13	11	9	8	7	6	5
			3	13	13	13	13	12	11	9	8	7	6	5	4
		28 to 45 Degrees	1	19	19	19	19	19	19	18	16	13	12	10	9
			2	19	19	19	19	19	19	16	14	12	11	9	8
			3	19	17	16	14	13	12	10	9	7	6	6	5
	D	0 to 6 Degrees	1	15	15	15	15	15	15	15	14	12	11	9	8
			2	15	15	15	15	15	15	12	10	9	8	7	6
			3	15	15	14	12	11	10	9	7	6	5	5	4
		7 to 27 Degrees	1	13	13	13	13	13	13	13	12	10	9	8	7
			2	13	13	13	13	12	11	9	8	7	6	5	4
			3	13	13	12	11	10	9	7	6	5	5	4	4
		28 to 45 Degrees	1	19	19	19	19	19	18	15	13	11	10	9	8
			2	19	19	19	19	18	16	14	12	10	9	8	7
			3	16	14	13	12	11	10	8	7	6	5	5	4

Note: See SML "Roof Area" conversion chart and associated ASCE 7-16 Roof Zones on pages 4-10.

Gable Roof RT6

RT-[E] Mount Mini OSB Only Installations
(72 Cell PV Panels)
Maximum Mount Spacing in Inches

Portrait Orientation - ASCE 7-16

Snow Load	Exposure Category	Roof Angle	Roof Area	Basic Wind Speed, V (mph) 95	100	105	110	115	120	130	140	150	160	170	180
0 PSF	B	0 to 6 Degrees	1	54	48	43	38	34	31	26	22	19	16	14	13
			2	38	34	30	27	24	22	19	16	14	12	10	9
			3	26	23	21	19	17	15	13	11	9	8	7	6
		7 to 27 Degrees	1	43	38	34	31	28	25	21	18	16	14	12	11
			2	27	24	22	20	18	16	14	12	10	9	8	7
			3	22	20	18	16	15	13	11	10	8	7	6	6
		28 to 45 Degrees	1	43	39	35	32	29	27	23	19	17	15	13	11
			2	39	35	31	29	26	24	20	17	15	13	12	10
			3	24	21	19	18	16	15	12	11	9	8	7	6
	C	0 to 6 Degrees	1	36	32	29	26	23	21	18	15	13	11	10	9
			2	26	23	21	19	17	15	13	11	9	8	7	6
			3	18	16	14	13	12	11	9	8	7	6	5	4
		7 to 27 Degrees	1	29	26	23	21	19	18	15	13	11	9	8	7
			2	19	17	15	14	12	11	10	8	7	6	5	5
			3	15	14	12	11	10	9	8	7	6	5	4	4
		28 to 45 Degrees	1	30	27	25	22	20	19	16	14	12	10	9	8
			2	27	25	22	20	18	17	14	12	11	9	8	7
			3	17	15	14	12	11	10	9	7	6	6	5	4
	D	0 to 6 Degrees	1	30	27	24	22	19	18	15	13	11	9	8	7
			2	21	19	17	15	14	13	11	9	8	7	6	5
			3	15	13	12	11	10	9	7	6	5	5	4	4
		7 to 27 Degrees	1	24	22	20	18	16	15	12	10	9	8	7	6
			2	16	14	13	11	10	9	8	7	6	5	4	4
			3	13	11	10	9	8	8	6	5	5	4	4	3
		28 to 45 Degrees	1	26	23	21	19	17	16	13	11	10	9	8	7
			2	23	21	19	17	15	14	12	10	9	8	7	6
			3	14	13	11	10	9	9	7	6	5	5	4	4
1-10 PSF	B	0 to 6 Degrees	1	48	48	43	38	34	31	26	22	19	16	14	13
			2	38	34	30	27	24	22	19	16	14	12	10	9
			3	26	23	21	19	17	15	13	11	9	8	7	6
		7 to 27 Degrees	1	43	38	34	31	28	25	21	18	16	14	12	11
			2	27	24	22	20	18	16	14	12	10	9	8	7
			3	22	20	18	16	15	13	11	10	8	7	6	6
		28 to 45 Degrees	1	43	39	35	32	29	27	23	19	17	15	13	11
			2	39	35	31	29	26	24	20	17	15	13	12	10
			3	24	21	19	18	16	15	12	11	9	8	7	6
	C	0 to 6 Degrees	1	36	32	29	26	23	21	18	15	13	11	10	9
			2	26	23	21	19	17	15	13	11	9	8	7	6
			3	18	16	14	13	12	11	9	8	7	6	5	4
		7 to 27 Degrees	1	29	26	23	21	19	18	15	13	11	9	8	7
			2	19	17	15	14	12	11	10	8	7	6	5	5
			3	15	14	12	11	10	9	8	7	6	5	4	4
		28 to 45 Degrees	1	30	27	25	22	20	19	16	14	12	10	9	8
			2	27	25	22	20	18	17	14	12	11	9	8	7
			3	17	15	14	12	11	10	9	7	6	6	5	4
	D	0 to 6 Degrees	1	30	27	24	22	19	18	15	13	11	9	8	7
			2	21	19	17	15	14	13	11	9	8	7	6	5
			3	15	13	12	11	10	9	7	6	5	5	4	4
		7 to 27 Degrees	1	24	22	20	18	16	15	12	10	9	8	7	6
			2	16	14	13	11	10	9	8	7	6	5	4	4
			3	13	11	10	9	8	8	6	5	5	4	4	3
		28 to 45 Degrees	1	26	23	21	19	17	16	13	11	10	9	8	7
			2	23	21	19	17	15	14	12	10	9	8	7	6
			3	14	13	11	10	9	9	7	6	5	5	4	4
11-20 PSF	B	0 to 6 Degrees	1	33	33	33	33	33	31	26	22	19	16	14	13
			2	33	33	30	27	24	22	19	16	14	12	10	9
			3	26	23	21	19	17	15	13	11	9	8	7	6
		7 to 27 Degrees	1	30	30	30	30	28	25	21	18	16	14	12	11
			2	27	24	22	20	18	16	14	12	10	9	8	7
			3	22	20	18	16	15	13	11	10	8	7	6	6
		28 to 45 Degrees	1	36	36	35	32	29	27	23	19	17	15	13	11
			2	36	35	31	29	26	24	20	17	15	13	12	10
			3	24	21	19	18	16	15	12	11	9	8	7	6
	C	0 to 6 Degrees	1	33	32	29	26	23	21	18	15	13	11	10	9
			2	26	23	21	19	17	15	13	11	9	8	7	6
			3	18	16	14	13	12	11	9	8	7	6	5	4
		7 to 27 Degrees	1	29	26	23	21	19	18	15	13	11	9	8	7
			2	19	17	15	14	12	11	10	8	7	6	5	5
			3	15	14	12	11	10	9	8	7	6	5	4	4
		28 to 45 Degrees	1	30	27	25	22	20	19	16	14	12	10	9	8
			2	27	25	22	20	18	17	14	12	11	9	8	7
			3	17	15	14	12	11	10	9	7	6	6	5	4
	D	0 to 6 Degrees	1	30	27	24	22	19	18	15	13	11	9	8	7
			2	21	19	17	15	14	13	11	9	8	7	6	5
			3	15	13	12	11	10	9	7	6	5	5	4	4
		7 to 27 Degrees	1	24	22	20	18	16	15	12	10	9	8	7	6
			2	16	14	13	11	10	9	8	7	6	5	4	4
			3	13	11	10	9	8	8	6	5	5	4	4	3
		28 to 45 Degrees	1	26	23	21	19	17	16	13	11	10	9	8	7
			2	23	21	19	17	15	14	12	10	9	8	7	6
			3	14	13	11	10	9	9	7	6	5	5	4	4

Note: See SML "Roof Area" conversion chart and associated ASCE 7-16 Roof Zones on pages 4-10.

Gable Roof RT6	RT-[E] Mount Mini OSB Only Installations (72 Cell PV Panels) Maximum Mount Spacing in Inches														
Portrait Orientation - ASCE 7-16															
Snow Load	Exposure Category	Roof Angle	Roof Area	Basic Wind Speed, V (mph) 95	100	105	110	115	120	130	140	150	160	170	180
21-30 PSF	B	0 to 6 Degrees	1	29	29	29	29	29	29	26	22	19	16	14	13
			2	29	29	29	27	24	22	19	16	14	12	10	9
			3	26	23	21	19	17	15	13	11	9	8	7	6
		7 to 27 Degrees	1	25	25	25	25	25	25	21	18	16	14	12	11
			2	25	24	22	20	18	16	14	12	10	9	8	7
			3	22	20	18	16	15	13	11	10	8	7	6	6
		28 to 45 Degrees	1	32	32	32	32	29	27	23	19	17	15	13	11
			2	32	32	31	29	26	24	20	17	15	13	12	10
			3	24	21	19	18	16	15	12	11	9	8	7	6
	C	0 to 6 Degrees	1	29	29	29	26	23	21	18	15	13	11	10	9
			2	26	23	21	19	17	15	13	11	9	8	7	6
			3	18	16	14	13	12	11	9	8	7	6	5	4
		7 to 27 Degrees	1	25	25	23	21	19	18	15	13	11	9	8	7
			2	19	17	15	14	12	11	10	8	7	6	5	5
			3	15	14	12	11	10	9	8	7	6	5	4	4
		28 to 45 Degrees	1	30	27	25	22	20	19	16	14	12	10	9	8
			2	27	25	22	20	18	17	14	12	11	9	8	7
			3	17	15	14	12	11	10	9	7	6	6	5	4
	D	0 to 6 Degrees	1	29	27	24	22	19	18	15	13	11	9	8	7
			2	21	19	17	15	14	13	11	9	8	7	6	5
			3	15	13	12	11	10	9	7	6	5	5	4	4
		7 to 27 Degrees	1	24	22	20	18	16	15	12	10	9	8	7	6
			2	16	14	13	11	10	9	8	7	6	5	4	4
			3	13	11	10	9	8	8	6	5	5	4	4	3
		28 to 45 Degrees	1	26	23	21	19	17	16	13	11	10	9	8	7
			2	23	21	19	17	15	14	12	10	9	8	7	6
			3	14	13	11	10	9	9	7	6	5	5	4	4
31-40 PSF	B	0 to 6 Degrees	1	23	23	23	23	23	23	23	22	19	16	14	13
			2	23	23	23	23	23	22	19	16	14	12	10	9
			3	23	23	21	19	17	15	13	11	9	8	7	6
		7 to 27 Degrees	1	20	20	20	20	20	20	20	18	16	14	12	11
			2	20	20	20	20	18	16	14	12	10	9	8	7
			3	20	20	18	16	15	13	11	10	8	7	6	6
		28 to 45 Degrees	1	27	27	27	27	27	51	23	19	17	15	13	11
			2	27	27	27	27	26	24	20	17	15	13	12	10
			3	24	21	19	18	16	15	12	11	9	8	7	6
	C	0 to 6 Degrees	1	23	23	23	23	23	21	18	15	13	11	10	9
			2	23	23	21	19	17	15	13	11	9	8	7	6
			3	18	16	14	13	12	11	9	8	7	6	5	4
		7 to 27 Degrees	1	20	20	20	20	19	18	15	13	11	9	8	7
			2	19	17	15	14	12	11	10	8	7	6	5	5
			3	15	14	12	11	10	9	8	7	6	5	4	4
		28 to 45 Degrees	1	27	26	25	22	20	19	16	14	12	10	9	8
			2	27	25	22	20	18	17	14	12	11	9	8	7
			3	17	15	14	12	11	10	9	7	6	6	5	4
	D	0 to 6 Degrees	1	23	23	23	22	19	18	15	13	11	9	8	7
			2	21	19	17	15	14	13	11	9	8	7	6	5
			3	15	13	12	11	10	9	7	6	5	5	4	4
		7 to 27 Degrees	1	20	20	20	18	16	15	12	10	9	8	7	6
			2	16	14	13	11	10	9	8	7	6	5	4	4
			3	13	11	10	9	8	8	6	5	5	4	4	3
		28 to 45 Degrees	1	26	23	21	19	17	16	13	11	10	9	8	7
			2	23	21	19	17	15	14	12	10	9	8	7	6
			3	14	13	11	10	9	9	7	6	5	5	4	4
41-50 PSF	B	0 to 6 Degrees	1	18	18	18	18	18	18	18	18	18	16	14	13
			2	18	18	18	18	18	18	18	16	14	12	10	9
			3	18	18	18	18	17	15	13	11	9	8	7	6
		7 to 27 Degrees	1	16	16	16	16	16	16	16	16	16	14	12	11
			2	16	16	16	16	16	16	14	12	10	9	8	7
			3	16	16	16	16	15	13	11	10	8	7	6	6
		28 to 45 Degrees	1	22	22	22	22	22	22	22	19	17	15	13	11
			2	22	22	22	22	22	22	20	17	15	13	12	10
			3	22	21	19	18	16	15	12	11	9	8	7	6
	C	0 to 6 Degrees	1	18	18	18	18	18	18	18	15	13	11	10	9
			2	18	18	18	18	17	15	13	11	9	8	7	6
			3	18	16	14	13	12	11	9	8	7	6	5	4
		7 to 27 Degrees	1	16	16	16	16	16	16	15	13	11	9	8	7
			2	16	16	15	14	12	11	10	8	7	6	5	5
			3	15	14	12	11	10	9	8	7	6	5	4	4
		28 to 45 Degrees	1	22	22	22	22	20	19	16	14	12	10	9	8
			2	22	22	22	20	18	17	14	12	11	9	8	7
			3	17	15	14	12	11	10	9	7	6	6	5	4
	D	0 to 6 Degrees	1	18	18	18	18	18	18	15	13	11	9	8	7
			2	18	18	17	15	14	13	11	9	8	7	6	5
			3	15	13	12	11	10	9	7	6	5	5	4	4
		7 to 27 Degrees	1	16	16	16	16	16	15	12	10	9	8	7	6
			2	16	14	13	11	10	9	8	7	6	5	4	4
			3	13	11	10	9	8	8	6	5	5	4	4	3
		28 to 45 Degrees	1	22	22	21	19	17	16	13	11	10	9	8	7
			2	22	21	19	17	15	14	12	10	9	8	7	6
			3	14	13	11	10	9	9	7	6	5	5	4	4

Note: See SML "Roof Area" conversion chart and associated ASCE 7-16 Roof Zones on pages 4-10.

Gable Roof RT6	RT-[E] Mount Mini OSB Only Installations (72 Cell PV Panels) Maximum Mount Spacing in Inches														
Portrait Orientation - ASCE 7-16															
Snow Load	Exposure Category	Roof Angle	Roof Area	Basic Wind Speed, V (mph)											
				95	100	105	110	115	120	130	140	150	160	170	180
51-60 PSF	B	0 to 6 Degrees	1	15	15	15	15	15	15	15	15	15	15	14	13
			2	15	15	15	15	15	15	15	15	14	12	10	9
			3	15	15	15	15	15	15	13	11	9	8	7	6
		7 to 27 Degrees	1	13	13	13	13	13	13	13	13	13	13	12	11
			2	13	13	13	13	13	13	13	12	10	9	8	7
			3	13	13	13	13	13	13	11	10	8	7	6	6
		28 to 45 Degrees	1	19	19	19	19	19	19	19	19	17	15	13	11
			2	19	19	19	19	19	19	19	17	15	13	12	10
			3	19	19	19	18	16	15	12	11	9	8	7	6
	C	0 to 6 Degrees	1	15	15	15	15	15	15	15	15	13	11	10	9
			2	15	15	15	15	15	15	13	11	9	8	7	6
			3	15	15	14	13	12	11	9	8	7	6	5	4
		7 to 27 Degrees	1	13	13	13	13	13	13	13	13	11	9	8	7
			2	13	13	13	13	12	11	10	8	7	6	5	5
			3	13	13	12	11	10	9	8	7	6	5	4	4
		28 to 45 Degrees	1	19	19	19	19	19	19	16	14	12	10	9	8
			2	19	19	19	19	18	17	14	12	11	9	8	7
			3	17	15	14	12	11	10	9	7	6	6	5	4
	D	0 to 6 Degrees	1	15	15	15	15	15	15	15	13	11	9	8	7
			2	15	15	15	15	14	13	11	9	8	7	6	5
			3	15	13	12	11	10	9	7	6	5	5	4	4
		7 to 27 Degrees	1	13	13	13	13	13	13	12	10	9	8	7	6
			2	13	13	13	11	10	9	8	7	6	5	4	4
			3	13	11	10	9	8	8	6	5	5	4	4	3
		28 to 45 Degrees	1	19	19	19	19	17	16	13	11	10	9	8	7
			2	19	19	19	17	15	14	12	10	9	8	7	6
			3	14	13	11	10	9	9	7	6	5	5	4	4
61-70 PSF	B	0 to 6 Degrees	1	13	13	13	13	13	13	13	13	13	13	13	13
			2	13	13	13	13	13	13	13	13	13	12	10	9
			3	13	13	13	13	13	13	13	11	9	8	7	6
		7 to 27 Degrees	1	12	12	12	12	12	12	12	12	12	12	12	11
			2	12	12	12	12	12	12	12	12	10	9	8	7
			3	12	12	12	12	12	12	11	10	8	7	6	6
		28 to 45 Degrees	1	16	16	16	16	16	16	16	16	16	15	13	11
			2	16	16	16	16	16	16	16	16	15	13	12	10
			3	16	16	16	16	16	15	12	11	9	8	7	6
	C	0 to 6 Degrees	1	13	13	13	13	13	13	13	13	13	11	10	9
			2	13	13	13	13	13	13	13	11	9	8	7	6
			3	13	13	13	13	12	11	9	8	7	6	5	4
		7 to 27 Degrees	1	12	12	12	12	12	12	12	12	11	9	8	7
			2	12	12	12	12	12	11	10	8	7	6	5	5
			3	12	12	12	11	10	9	8	7	6	5	4	4
		28 to 45 Degrees	1	16	16	16	16	16	16	16	14	12	10	9	8
			2	16	16	16	16	16	16	14	12	11	9	8	7
			3	16	15	14	12	11	10	9	7	6	6	5	4
	D	0 to 6 Degrees	1	13	13	13	13	13	13	13	13	11	9	8	7
			2	13	13	13	13	13	13	11	9	8	7	6	5
			3	13	13	12	11	10	9	7	6	5	5	4	4
		7 to 27 Degrees	1	12	12	12	12	12	12	12	10	9	8	7	6
			2	12	12	12	11	10	9	8	7	6	5	4	4
			3	12	11	10	9	8	8	6	5	5	4	4	3
		28 to 45 Degrees	1	16	16	16	16	16	16	13	11	10	9	8	7
			2	16	16	16	16	15	14	12	10	9	8	7	6
			3	14	13	11	10	9	9	7	6	5	5	4	4

Note: See SML "Roof Area" conversion chart and associated ASCE 7-16 Roof Zones on pages 4-10.

Gable Roof RT7	RT-[E] Mount Mini Rafter Installations Cont. Maximum Mount Spacing in Inches														
Landscape Orientation - ASCE 7-16															
Snow Load	Exposure Category	Roof Angle	Roof Area	Basic Wind Speed, V (mph)											
				95	100	105	110	115	120	130	140	150	160	170	180
0 PSF	B	0 to 6 Degrees	1	96	96	96	96	96	96	96	96	96	95	84	74
			2	96	96	96	96	96	96	96	92	79	69	61	54
			3	96	96	96	96	96	90	76	65	56	49	43	38
		7 to 27 Degrees	1	96	96	96	96	96	96	96	96	90	78	69	61
			2	96	96	96	96	96	94	79	68	59	52	45	40
			3	96	96	96	91	83	76	65	56	48	42	37	33
		28 to 45 Degrees	1	96	96	96	96	96	96	96	96	95	83	74	66
			2	96	96	96	96	96	96	96	96	85	75	67	59
			3	96	96	96	96	91	83	71	61	53	47	42	37
	C	0 to 6 Degrees	1	96	96	96	96	96	96	96	88	76	67	59	52
			2	96	96	96	96	96	89	75	64	55	48	43	38
			3	96	92	83	75	68	63	53	45	39	34	30	27
		7 to 27 Degrees	1	96	96	96	96	96	96	85	73	63	55	49	43
			2	96	96	87	79	72	66	56	48	42	36	32	29
			3	87	79	71	65	59	54	46	39	34	30	27	24
		28 to 45 Degrees	1	96	96	96	96	96	96	90	78	68	60	53	47
			2	96	96	96	96	96	95	81	70	61	54	47	42
			3	95	86	78	71	65	60	51	44	38	33	30	26
	D	0 to 6 Degrees	1	96	96	96	96	96	96	86	74	64	56	49	44
			2	96	96	96	89	81	74	63	54	47	41	36	32
			3	86	77	69	63	57	53	44	38	33	29	25	23
		7 to 27 Degrees	1	96	96	96	96	92	84	71	61	53	46	41	36
			2	90	81	73	66	60	55	47	40	35	31	27	24
			3	73	66	60	54	50	46	39	33	29	25	22	20
		28 to 45 Degrees	1	96	96	96	96	96	89	76	66	57	50	45	40
			2	96	96	96	96	88	81	69	59	52	45	40	36
			3	80	72	66	60	55	50	43	37	32	28	25	22
1-10 PSF	B	0 to 6 Degrees	1	96	96	96	96	96	96	96	96	96	95	84	74
			2	96	96	96	96	96	96	96	92	79	69	61	54
			3	96	96	96	96	96	90	76	65	56	49	43	38
		7 to 27 Degrees	1	96	96	96	96	96	96	96	96	90	78	69	61
			2	96	96	96	96	96	94	79	68	59	52	45	40
			3	96	96	96	91	83	76	65	56	48	42	37	33
		28 to 45 Degrees	1	96	96	96	96	96	96	96	96	95	83	74	66
			2	96	96	96	96	96	96	96	96	85	75	67	59
			3	96	96	96	96	91	83	71	61	53	47	42	37
	C	0 to 6 Degrees	1	96	96	96	96	96	96	96	88	76	67	59	52
			2	96	96	96	96	96	89	75	64	55	48	43	38
			3	96	92	83	75	68	63	53	45	39	34	30	27
		7 to 27 Degrees	1	96	96	96	96	96	96	85	73	63	55	49	43
			2	96	96	87	79	72	66	56	48	42	36	32	29
			3	87	79	71	65	59	54	46	39	34	30	27	24
		28 to 45 Degrees	1	96	96	96	96	96	96	90	78	68	60	53	47
			2	96	96	96	96	96	95	81	70	61	54	47	42
			3	95	86	78	71	65	60	51	44	38	33	30	26
	D	0 to 6 Degrees	1	96	96	96	96	96	96	86	74	64	56	49	44
			2	96	96	96	89	81	74	63	54	47	41	36	32
			3	86	77	69	63	57	53	44	38	33	29	25	23
		7 to 27 Degrees	1	96	96	96	96	92	84	71	61	53	46	41	36
			2	90	81	73	66	60	55	47	40	35	31	27	24
			3	73	66	60	54	50	46	39	33	29	25	22	20
		28 to 45 Degrees	1	96	96	96	96	96	89	76	66	57	50	45	40
			2	96	96	96	96	88	81	69	59	52	45	40	36
			3	80	72	66	60	55	50	43	37	32	28	25	22
11-20 PSF	B	0 to 6 Degrees	1	96	96	96	96	96	96	96	96	96	95	84	74
			2	96	96	96	96	96	96	96	92	79	69	61	54
			3	96	96	96	96	96	90	76	65	56	49	43	38
		7 to 27 Degrees	1	96	96	96	96	96	96	96	96	90	78	69	61
			2	96	96	96	96	96	94	79	68	59	52	45	40
			3	96	96	96	91	83	76	65	56	48	42	37	33
		28 to 45 Degrees	1	96	96	96	96	96	96	96	96	95	83	74	66
			2	96	96	96	96	96	96	96	96	85	75	67	59
			3	96	96	96	96	91	83	71	61	53	47	42	37
	C	0 to 6 Degrees	1	96	96	96	96	96	96	96	88	76	67	59	52
			2	96	96	96	96	96	89	75	64	55	48	43	38
			3	96	92	83	75	68	63	53	45	39	34	30	27
		7 to 27 Degrees	1	96	96	96	96	96	96	85	73	63	55	49	43
			2	96	96	87	79	72	66	56	48	42	36	32	29
			3	87	79	71	65	59	54	46	39	34	30	27	24
		28 to 45 Degrees	1	96	96	96	96	96	96	90	78	68	60	53	47
			2	96	96	96	96	96	95	81	70	61	54	47	42
			3	95	86	78	71	65	60	51	44	38	33	30	26
	D	0 to 6 Degrees	1	96	96	96	96	96	96	86	74	64	56	49	44
			2	96	96	96	89	81	74	63	54	47	41	36	32
			3	86	77	69	63	57	53	44	38	33	29	25	23
		7 to 27 Degrees	1	96	96	96	96	92	84	71	61	53	46	41	36
			2	90	81	73	66	60	55	47	40	35	31	27	24
			3	73	66	60	54	50	46	39	33	29	25	22	20
		28 to 45 Degrees	1	96	96	96	96	96	89	76	66	57	50	45	40
			2	96	96	96	96	88	81	69	59	52	45	40	36
			3	80	72	66	60	55	50	43	37	32	28	25	22

Note: See SML "Roof Area" conversion chart and associated ASCE 7-16 Roof Zones on pages 4-10.

Gable Roof RT7	RT-[E] Mount Mini Rafter Installations Cont. Maximum Mount Spacing in Inches														
Landscape Orientation - ASCE 7-16															
Snow Load	Exposure Category	Roof Angle	Roof Area	Basic Wind Speed, V (mph)											
				95	100	105	110	115	120	130	140	150	160	170	180
21-30 PSF	B	0 to 6 Degrees	1	96	96	96	96	96	96	96	96	96	95	84	74
			2	96	96	96	96	96	96	96	92	79	69	61	54
			3	96	96	96	96	96	90	76	65	56	49	43	38
		7 to 27 Degrees	1	96	96	96	96	96	96	96	96	90	78	69	61
			2	96	96	96	96	96	94	79	68	59	52	45	40
			3	96	96	96	91	83	76	65	56	48	42	37	33
		28 to 45 Degrees	1	96	96	96	96	96	96	96	96	95	83	74	66
			2	96	96	96	96	96	96	96	96	85	75	67	59
			3	96	96	96	96	91	83	71	61	53	47	42	37
	C	0 to 6 Degrees	1	96	96	96	96	96	96	96	88	76	67	59	52
			2	96	96	96	96	96	89	75	64	55	48	43	38
			3	96	92	83	75	68	63	53	45	39	34	30	27
		7 to 27 Degrees	1	96	96	96	96	96	96	85	73	63	55	49	43
			2	96	96	87	79	72	66	56	48	42	36	32	29
			3	87	79	71	65	59	54	46	39	34	30	27	24
		28 to 45 Degrees	1	96	96	96	96	96	96	90	78	68	60	53	47
			2	96	96	96	96	96	95	81	70	61	54	47	42
			3	95	86	78	71	65	60	51	44	38	33	30	26
	D	0 to 6 Degrees	1	96	96	96	96	96	96	86	74	64	56	49	44
			2	96	96	96	89	81	74	63	54	47	41	36	32
			3	86	77	69	63	57	53	44	38	33	29	25	23
		7 to 27 Degrees	1	96	96	96	96	92	84	71	61	53	46	41	36
			2	90	81	73	66	60	55	47	40	35	31	27	24
			3	73	66	60	54	50	46	39	33	29	25	22	20
		28 to 45 Degrees	1	96	96	96	96	96	89	76	66	57	50	45	40
			2	96	96	96	96	88	81	69	59	52	45	40	36
			3	80	72	66	60	55	50	43	37	32	28	25	22
31-40 PSF	B	0 to 6 Degrees	1	96	96	96	96	96	96	96	96	96	95	84	74
			2	96	96	96	96	96	96	96	92	79	69	61	54
			3	96	96	96	96	96	90	76	65	56	49	43	38
		7 to 27 Degrees	1	96	96	96	96	96	96	96	96	90	78	69	61
			2	96	96	96	96	96	94	79	68	59	52	45	40
			3	96	96	96	91	83	76	65	56	48	42	37	33
		28 to 45 Degrees	1	96	96	96	96	96	96	96	96	95	83	74	66
			2	96	96	96	96	96	96	96	96	85	75	67	59
			3	96	96	96	96	91	83	71	61	53	47	42	37
	C	0 to 6 Degrees	1	96	96	96	96	96	96	96	88	76	67	59	52
			2	96	96	96	96	96	89	75	64	55	48	43	38
			3	96	92	83	75	68	63	53	45	39	34	30	27
		7 to 27 Degrees	1	96	96	96	96	96	96	85	73	63	55	49	43
			2	96	96	87	79	72	66	56	48	42	36	32	29
			3	87	79	71	65	59	54	46	39	34	30	27	24
		28 to 45 Degrees	1	96	96	96	96	96	96	90	78	68	60	53	47
			2	96	96	96	96	96	95	81	70	61	54	47	42
			3	95	86	78	71	65	60	51	44	38	33	30	26
	D	0 to 6 Degrees	1	96	96	96	96	96	96	86	74	64	56	49	44
			2	96	96	96	89	81	74	63	54	47	41	36	32
			3	86	77	69	63	57	53	44	38	33	29	25	23
		7 to 27 Degrees	1	96	96	96	96	92	84	71	61	53	46	41	36
			2	90	81	73	66	60	55	47	40	35	31	27	24
			3	73	66	60	54	50	46	39	33	29	25	22	20
		28 to 45 Degrees	1	96	96	96	96	96	89	76	66	57	50	45	40
			2	96	96	96	96	88	81	69	59	52	45	40	36
			3	80	72	66	60	55	50	43	37	32	28	25	22
41-50 PSF	B	0 to 6 Degrees	1	96	96	96	96	96	96	96	96	96	95	84	74
			2	96	96	96	96	96	96	96	92	79	69	61	54
			3	96	96	96	96	96	90	76	65	56	49	43	38
		7 to 27 Degrees	1	96	96	96	96	96	96	96	96	90	78	69	61
			2	96	96	96	96	96	94	79	68	59	52	45	40
			3	96	96	96	91	83	76	65	56	48	42	37	33
		28 to 45 Degrees	1	96	96	96	96	96	96	96	96	95	83	74	66
			2	96	96	96	96	96	96	96	96	85	75	67	59
			3	96	96	96	96	91	83	71	61	53	47	42	37
	C	0 to 6 Degrees	1	96	96	96	96	96	96	96	88	76	67	59	52
			2	96	96	96	96	96	89	75	64	55	48	43	38
			3	96	92	83	75	68	63	53	45	39	34	30	27
		7 to 27 Degrees	1	96	96	96	96	96	96	85	73	63	55	49	43
			2	96	96	87	79	72	66	56	48	42	36	32	29
			3	87	79	71	65	59	54	46	39	34	30	27	24
		28 to 45 Degrees	1	96	96	96	96	96	96	90	78	68	60	53	47
			2	96	96	96	96	96	95	81	70	61	54	47	42
			3	95	86	78	71	65	60	51	44	38	33	30	26
	D	0 to 6 Degrees	1	96	96	96	96	96	96	86	74	64	56	49	44
			2	96	96	96	89	81	74	63	54	47	41	36	32
			3	86	77	69	63	57	53	44	38	33	29	25	23
		7 to 27 Degrees	1	96	96	96	96	92	84	71	61	53	46	41	36
			2	90	81	73	66	60	55	47	40	35	31	27	24
			3	73	66	60	54	50	46	39	33	29	25	22	20
		28 to 45 Degrees	1	96	96	96	96	96	89	76	66	57	50	45	40
			2	96	96	96	96	88	81	69	59	52	45	40	36
			3	80	72	66	60	55	50	43	37	32	28	25	22

Note: See SML "Roof Area" conversion chart and associated ASCE 7-16 Roof Zones on pages 4-10.

Gable Roof RT7	RT-[E] Mount Mini Rafter Installations Cont. Maximum Mount Spacing in Inches														
Landscape Orientation - ASCE 7-16															
Snow Load	Exposure Category	Roof Angle	Roof Area	Basic Wind Speed, V (mph)											
				95	100	105	110	115	120	130	140	150	160	170	180
51-60 PSF	B	0 to 6 Degrees	1	96	96	96	96	96	96	96	96	96	95	84	74
			2	96	96	96	96	96	96	96	92	79	69	61	54
			3	96	96	96	96	96	90	76	65	56	49	43	38
		7 to 27 Degrees	1	96	96	96	96	96	96	96	96	90	78	69	61
			2	96	96	96	96	96	94	79	68	59	52	45	40
			3	96	96	96	91	83	76	65	56	48	42	37	33
		28 to 45 Degrees	1	96	96	96	96	96	96	96	96	95	83	74	66
			2	96	96	96	96	96	96	96	96	85	75	67	59
			3	96	96	96	96	91	83	71	61	53	47	42	37
	C	0 to 6 Degrees	1	96	96	96	96	96	96	96	88	76	67	59	52
			2	96	96	96	96	96	89	75	64	55	48	43	38
			3	96	92	83	75	68	63	53	45	39	34	30	27
		7 to 27 Degrees	1	96	96	96	96	96	96	85	73	63	55	49	43
			2	96	96	87	79	72	66	56	48	42	36	32	29
			3	87	79	71	65	59	54	46	39	34	30	27	24
		28 to 45 Degrees	1	96	96	96	96	96	96	90	78	68	60	53	47
			2	96	96	96	96	96	95	81	70	61	54	47	42
			3	95	86	78	71	65	60	51	44	38	33	30	26
	D	0 to 6 Degrees	1	96	96	96	96	96	96	86	74	64	56	49	44
			2	96	96	96	89	81	74	63	54	47	41	36	32
			3	86	77	69	63	57	53	44	38	33	29	25	23
		7 to 27 Degrees	1	96	96	96	96	92	84	71	61	53	46	41	36
			2	90	81	73	66	60	55	47	40	35	31	27	24
			3	73	66	60	54	50	46	39	33	29	25	22	20
		28 to 45 Degrees	1	96	96	96	96	96	89	76	66	57	50	45	40
			2	96	96	96	96	88	81	69	59	52	45	40	36
			3	80	72	66	60	55	50	43	37	32	28	25	22
61-70 PSF	B	0 to 6 Degrees	1	96	96	96	96	96	96	96	96	96	95	84	74
			2	96	96	96	96	96	96	96	92	79	69	61	54
			3	96	96	96	96	96	90	76	65	56	49	43	38
		7 to 27 Degrees	1	96	96	96	96	96	96	96	96	90	78	69	61
			2	96	96	96	96	96	94	79	68	59	52	45	40
			3	96	96	96	91	83	76	65	56	48	42	37	33
		28 to 45 Degrees	1	96	96	96	96	96	96	96	96	95	83	74	66
			2	96	96	96	96	96	96	96	96	85	75	67	59
			3	96	96	96	96	91	83	71	61	53	47	42	37
	C	0 to 6 Degrees	1	96	96	96	96	96	96	96	88	76	67	59	52
			2	96	96	96	96	96	89	75	64	55	48	43	38
			3	96	92	83	75	68	63	53	45	39	34	30	27
		7 to 27 Degrees	1	96	96	96	96	96	96	85	73	63	55	49	43
			2	96	96	87	79	72	66	56	48	42	36	32	29
			3	87	79	71	65	59	54	46	39	34	30	27	24
		28 to 45 Degrees	1	96	96	96	96	96	96	90	78	68	60	53	47
			2	96	96	96	96	96	95	81	70	61	54	47	42
			3	95	86	78	71	65	60	51	44	38	33	30	26
	D	0 to 6 Degrees	1	96	96	96	96	96	96	86	74	64	56	49	44
			2	96	96	96	89	81	74	63	54	47	41	36	32
			3	86	77	69	63	57	53	44	38	33	29	25	23
		7 to 27 Degrees	1	96	96	96	96	92	84	71	61	53	46	41	36
			2	90	81	73	66	60	55	47	40	35	31	27	24
			3	73	66	60	54	50	46	39	33	29	25	22	20
		28 to 45 Degrees	1	96	96	96	96	96	89	76	66	57	50	45	40
			2	96	96	96	96	88	81	69	59	52	45	40	36
			3	80	72	66	60	55	50	43	37	32	28	25	22

Note: See SML "Roof Area" conversion chart and associated ASCE 7-16 Roof Zones on pages 4-10.

Gable Roof RT8

RT-[E] Mount Mini Plywood Only Installations Cont.
Maximum Mount Spacing in Inches

Landscape Orientation - ASCE 7-16

Snow Load	Exposure Category	Roof Angle	Roof Area	Basic Wind Speed, V (mph) 95	100	105	110	115	120	130	140	150	160	170	180
0 PSF	B	0 to 6 Degrees	1	96	96	96	88	79	72	60	51	44	38	34	30
			2	87	77	69	62	57	51	43	37	32	28	24	21
			3	60	53	48	43	39	36	30	26	22	19	17	15
		7 to 27 Degrees	1	96	88	79	71	65	59	49	42	36	32	28	25
			2	63	56	51	46	42	38	32	27	24	21	18	16
			3	51	46	41	37	34	31	26	22	19	17	15	13
		28 to 45 Degrees	1	96	91	82	74	68	62	53	45	39	34	30	27
			2	91	81	74	67	61	56	47	41	35	31	27	24
			3	56	50	45	41	37	34	29	25	22	19	17	15
	C	0 to 6 Degrees	1	84	74	67	60	54	49	42	35	31	27	23	21
			2	59	53	48	43	39	36	30	26	22	19	17	15
			3	41	37	33	30	27	25	21	18	16	14	12	11
		7 to 27 Degrees	1	68	61	54	49	45	41	34	29	25	22	20	17
			2	44	39	35	32	29	27	22	19	17	14	13	11
			3	36	32	29	26	24	22	18	16	14	12	10	9
		28 to 45 Degrees	1	71	64	58	52	48	44	37	32	28	24	21	19
			2	64	57	52	47	43	39	33	29	25	22	19	17
			3	39	35	32	29	26	24	21	18	15	13	12	10
	D	0 to 6 Degrees	1	69	62	55	50	45	41	35	30	26	22	20	17
			2	49	44	40	36	33	30	25	21	18	16	14	13
			3	34	31	28	25	23	21	18	15	13	11	10	9
		7 to 27 Degrees	1	56	50	45	41	37	34	29	25	21	19	16	14
			2	36	33	29	27	24	22	19	16	14	12	11	9
			3	30	27	24	22	20	18	15	13	11	10	9	8
		28 to 45 Degrees	1	60	54	49	44	40	37	31	27	23	20	18	16
			2	54	48	44	40	36	33	28	24	21	18	16	14
			3	33	30	27	24	22	20	17	15	13	11	10	9
1-10 PSF	B	0 to 6 Degrees	1	96	96	96	88	79	72	60	51	44	38	34	30
			2	87	77	69	62	57	51	43	37	32	28	24	21
			3	60	53	48	43	39	36	30	26	22	19	17	15
		7 to 27 Degrees	1	96	88	79	71	65	59	49	42	36	32	28	25
			2	63	56	51	46	42	38	32	27	24	21	18	16
			3	51	46	41	37	34	31	26	22	19	17	15	13
		28 to 45 Degrees	1	96	91	82	74	68	62	53	45	39	34	30	27
			2	91	81	74	67	61	56	47	41	35	31	27	24
			3	56	50	45	41	37	34	29	25	22	19	17	15
	C	0 to 6 Degrees	1	84	74	67	60	54	49	42	35	31	27	23	21
			2	59	53	48	43	39	36	30	26	22	19	17	15
			3	41	37	33	30	27	25	21	18	16	14	12	11
		7 to 27 Degrees	1	68	61	54	49	45	41	34	29	25	22	20	17
			2	44	39	35	32	29	27	22	19	17	14	13	11
			3	36	32	29	26	24	22	18	16	14	12	10	9
		28 to 45 Degrees	1	71	64	58	52	48	44	37	32	28	24	21	19
			2	64	57	52	47	43	39	33	29	25	22	19	17
			3	39	35	32	29	26	24	21	18	15	13	12	10
	D	0 to 6 Degrees	1	69	62	55	50	45	41	35	30	26	22	20	17
			2	49	44	40	36	33	30	25	21	18	16	14	13
			3	34	31	28	25	23	21	18	15	13	11	10	9
		7 to 27 Degrees	1	56	50	45	41	37	34	29	25	21	19	16	14
			2	36	33	29	27	24	22	19	16	14	12	11	9
			3	30	27	24	22	20	18	15	13	11	10	9	8
		28 to 45 Degrees	1	60	54	49	44	40	37	31	27	23	20	18	16
			2	54	48	44	40	36	33	28	24	21	18	16	14
			3	33	30	27	24	22	20	17	15	13	11	10	9
11-20 PSF	B	0 to 6 Degrees	1	96	96	96	88	79	72	60	51	44	38	34	30
			2	87	77	69	62	57	51	43	37	32	28	24	21
			3	60	53	48	43	39	36	30	26	22	19	17	15
		7 to 27 Degrees	1	96	88	79	71	65	59	49	42	36	32	28	25
			2	63	56	51	46	42	38	32	27	24	21	18	16
			3	51	46	41	37	34	31	26	22	19	17	15	13
		28 to 45 Degrees	1	96	91	82	74	68	62	53	45	39	34	30	27
			2	91	81	74	67	61	56	47	41	35	31	27	24
			3	56	50	45	41	37	34	29	25	22	19	17	15
	C	0 to 6 Degrees	1	84	74	67	60	54	49	42	35	31	27	23	21
			2	59	53	48	43	39	36	30	26	22	19	17	15
			3	41	37	33	30	27	25	21	18	16	14	12	11
		7 to 27 Degrees	1	68	61	54	49	45	41	34	29	25	22	20	17
			2	44	39	35	32	29	27	22	19	17	14	13	11
			3	36	32	29	26	24	22	18	16	14	12	10	9
		28 to 45 Degrees	1	71	64	58	52	48	44	37	32	28	24	21	19
			2	64	57	52	47	43	39	33	29	25	22	19	17
			3	39	35	32	29	26	24	21	18	15	13	12	10
	D	0 to 6 Degrees	1	69	62	55	50	45	41	35	30	26	22	20	17
			2	49	44	40	36	33	30	25	21	18	16	14	13
			3	34	31	28	25	23	21	18	15	13	11	10	9
		7 to 27 Degrees	1	56	50	45	41	37	34	29	25	21	19	16	14
			2	36	33	29	27	24	22	19	16	14	12	11	9
			3	30	27	24	22	20	18	15	13	11	10	9	8
		28 to 45 Degrees	1	60	54	49	44	40	37	31	27	23	20	18	16
			2	54	48	44	40	36	33	28	24	21	18	16	14
			3	33	30	27	24	22	20	17	15	13	11	10	9

Note: See SML "Roof Area" conversion chart and associated ASCE 7-16 Roof Zones on pages 4-10.

Gable Roof RT8	RT-[E] Mount Mini Plywood Only Installations Cont. Maximum Mount Spacing in Inches														
Landscape Orientation - ASCE 7-16															
Snow Load	Exposure Category	Roof Angle	Roof Area	Basic Wind Speed, V (mph)											
				95	100	105	110	115	120	130	140	150	160	170	180
21-30 PSF	B	0 to 6 Degrees	1	96	96	96	88	79	72	60	51	44	38	34	30
			2	87	77	69	62	57	51	43	37	32	28	24	21
			3	60	53	48	43	39	36	30	26	22	19	17	15
		7 to 27 Degrees	1	95	88	79	71	65	59	49	42	36	32	28	25
			2	63	56	51	46	42	38	32	27	24	21	18	16
			3	51	46	41	37	34	31	26	22	19	17	15	13
		28 to 45 Degrees	1	96	91	82	74	68	62	53	45	39	34	30	27
			2	91	81	74	67	61	56	47	41	35	31	27	24
			3	56	50	45	41	37	34	29	25	22	19	17	15
	C	0 to 6 Degrees	1	84	74	67	60	54	49	42	35	31	27	23	21
			2	59	53	48	43	39	36	30	26	22	19	17	15
			3	41	37	33	30	27	25	21	18	16	14	12	11
		7 to 27 Degrees	1	68	61	54	49	45	41	34	29	25	22	20	17
			2	44	39	35	32	29	27	22	19	17	14	13	11
			3	36	32	29	26	24	22	18	16	14	12	10	9
		28 to 45 Degrees	1	71	64	58	52	48	44	37	32	28	24	21	19
			2	64	57	52	47	43	39	33	29	25	22	19	17
			3	39	35	32	29	26	24	21	18	15	13	12	10
	D	0 to 6 Degrees	1	69	62	55	50	45	41	35	30	26	22	20	17
			2	49	44	40	36	33	30	25	21	18	16	14	13
			3	34	31	28	25	23	21	18	15	13	11	10	9
		7 to 27 Degrees	1	56	50	45	41	37	34	29	25	21	19	16	14
			2	36	33	29	27	24	22	19	16	14	12	11	9
			3	30	27	24	22	20	18	15	13	11	10	9	8
		28 to 45 Degrees	1	60	54	49	44	40	37	31	27	23	20	18	16
			2	54	48	44	40	36	33	28	24	21	18	16	14
			3	33	30	27	24	22	20	17	15	13	11	10	9
31-40 PSF	B	0 to 6 Degrees	1	91	91	91	88	79	72	60	51	44	38	34	30
			2	87	77	69	62	57	51	43	37	32	28	24	21
			3	60	53	48	43	39	36	30	26	22	19	17	15
		7 to 27 Degrees	1	74	74	74	71	65	59	49	42	36	32	28	25
			2	63	56	51	46	42	38	32	27	24	21	18	16
			3	51	46	41	37	34	31	26	22	19	17	15	13
		28 to 45 Degrees	1	91	91	82	74	68	62	53	45	39	34	30	27
			2	91	81	74	67	61	56	47	41	35	31	27	24
			3	56	50	45	41	37	34	29	25	22	19	17	15
	C	0 to 6 Degrees	1	84	74	67	60	54	49	42	35	31	27	23	21
			2	59	53	48	43	39	36	30	26	22	19	17	15
			3	41	37	33	30	27	25	21	18	16	14	12	11
		7 to 27 Degrees	1	68	61	54	49	45	41	34	29	25	22	20	17
			2	44	39	35	32	29	27	22	19	17	14	13	11
			3	36	32	29	26	24	22	18	16	14	12	10	9
		28 to 45 Degrees	1	71	64	58	52	48	44	37	32	28	24	21	19
			2	64	57	52	47	43	39	33	29	25	22	19	17
			3	39	35	32	29	26	24	21	18	15	13	12	10
	D	0 to 6 Degrees	1	69	62	55	50	45	41	35	30	26	22	20	17
			2	49	44	40	36	33	30	25	21	18	16	14	13
			3	34	31	28	25	23	21	18	15	13	11	10	9
		7 to 27 Degrees	1	56	50	45	41	37	34	29	25	21	19	16	14
			2	36	33	29	27	24	22	19	16	14	12	11	9
			3	30	27	24	22	20	18	15	13	11	10	9	8
		28 to 45 Degrees	1	60	54	49	44	40	37	31	27	23	20	18	16
			2	54	48	44	40	36	33	28	24	21	18	16	14
			3	33	30	27	24	22	20	17	15	13	11	10	9
41-50 PSF	B	0 to 6 Degrees	1	75	75	75	75	75	72	60	51	44	38	34	30
			2	75	75	69	62	57	51	43	37	32	28	24	21
			3	60	53	48	43	39	36	30	26	22	19	17	15
		7 to 27 Degrees	1	61	61	61	61	61	59	49	42	36	32	28	25
			2	61	56	51	46	42	38	32	27	24	21	18	16
			3	51	46	41	37	34	31	26	22	19	17	15	13
		28 to 45 Degrees	1	76	76	76	74	68	62	53	45	39	34	30	27
			2	76	76	74	67	61	56	47	41	35	31	27	24
			3	56	50	45	41	37	34	29	25	22	19	17	15
	C	0 to 6 Degrees	1	75	74	67	60	54	49	42	35	31	27	23	21
			2	59	53	48	43	39	36	30	26	22	19	17	15
			3	41	37	33	30	27	25	21	18	16	14	12	11
		7 to 27 Degrees	1	61	61	54	49	45	41	34	29	25	22	20	17
			2	44	39	35	32	29	27	22	19	17	14	13	11
			3	36	32	29	26	24	22	18	16	14	12	10	9
		28 to 45 Degrees	1	71	64	58	52	48	44	37	32	28	24	21	19
			2	64	57	52	47	43	39	33	29	25	22	19	17
			3	39	35	32	29	26	24	21	18	15	13	12	10
	D	0 to 6 Degrees	1	69	62	55	50	45	41	35	30	26	22	20	17
			2	49	44	40	36	33	30	25	21	18	16	14	13
			3	34	31	28	25	23	21	18	15	13	11	10	9
		7 to 27 Degrees	1	56	50	45	41	37	34	29	25	21	19	16	14
			2	36	33	29	27	24	22	19	16	14	12	11	9
			3	30	27	24	22	20	18	15	13	11	10	9	8
		28 to 45 Degrees	1	60	54	49	44	40	37	31	27	23	20	18	16
			2	54	48	44	40	36	33	28	24	21	18	16	14
			3	33	30	27	24	22	20	17	15	13	11	10	9

Note: See SML "Roof Area" conversion chart and associated ASCE 7-16 Roof Zones on pages 4-10.

Gable Roof RT8	RT-[E] Mount Mini Plywood Only Installations Cont. Maximum Mount Spacing in Inches													
Landscape Orientation - ASCE 7-16														
Snow Load	Exposure Category	Roof Angle	Roof Area	Basic Wind Speed, V (mph) 95	100	105	110	115	120	130	140	150	160	170	180
51-60 PSF	B	0 to 6 Degrees	1	63	63	63	63	63	63	60	51	44	38	34	30
			2	63	63	63	62	57	51	43	37	32	28	24	21
			3	60	53	48	43	39	36	30	26	22	19	17	15
		7 to 27 Degrees	1	51	51	51	51	51	51	49	42	36	32	28	25
			2	51	51	51	46	42	38	32	27	24	21	18	16
			3	51	46	41	37	34	31	26	22	19	17	15	13
		28 to 45 Degrees	1	64	64	64	64	64	62	53	45	39	34	30	27
			2	64	64	64	64	61	56	47	41	35	31	27	24
			3	56	50	45	41	37	34	29	25	22	19	17	15
	C	0 to 6 Degrees	1	63	63	63	60	54	49	42	35	31	27	23	21
			2	59	53	48	43	39	36	30	26	22	19	17	15
			3	41	37	33	30	27	25	21	18	16	14	12	11
		7 to 27 Degrees	1	51	51	51	49	45	41	34	29	25	22	20	17
			2	44	39	35	32	29	27	22	19	17	14	13	11
			3	36	32	29	26	24	22	18	16	14	12	10	9
		28 to 45 Degrees	1	64	64	58	52	48	44	37	32	28	24	21	19
			2	64	57	52	47	43	39	33	29	25	22	19	17
			3	39	35	32	29	26	24	21	18	15	13	12	10
	D	0 to 6 Degrees	1	63	62	55	50	54	41	35	30	26	22	20	17
			2	49	44	40	36	33	30	25	21	18	16	14	13
			3	34	31	28	25	23	21	18	15	13	11	10	9
		7 to 27 Degrees	1	51	50	45	41	37	34	29	25	21	19	16	14
			2	36	33	29	27	24	22	19	16	14	12	11	9
			3	30	27	24	22	20	18	15	13	11	10	9	8
		28 to 45 Degrees	1	60	54	49	44	40	37	31	27	23	20	18	16
			2	54	48	44	40	36	33	28	24	21	18	16	14
			3	33	30	27	24	22	20	17	15	13	11	10	9
61-70 PSF	B	0 to 6 Degrees	1	54	54	54	54	54	54	54	51	44	38	34	30
			2	54	54	54	54	54	51	43	37	32	28	24	21
			3	54	53	48	43	39	36	30	26	22	19	17	15
		7 to 27 Degrees	1	44	44	44	44	44	44	44	42	36	32	28	25
			2	44	44	44	44	42	38	32	27	24	21	18	16
			3	44	44	41	37	34	31	26	22	19	17	15	13
		28 to 45 Degrees	1	56	56	56	56	56	56	53	45	39	34	30	27
			2	56	56	56	56	56	56	47	41	35	31	27	24
			3	56	50	45	41	37	34	29	25	22	19	17	15
	C	0 to 6 Degrees	1	54	54	54	54	54	49	42	35	31	27	23	21
			2	54	53	48	43	39	36	30	26	22	19	17	15
			3	41	37	33	30	27	25	21	18	16	14	12	11
		7 to 27 Degrees	1	44	44	44	44	44	41	34	29	25	22	20	17
			2	44	39	35	32	29	27	22	19	17	14	13	11
			3	36	32	29	26	24	22	18	16	14	12	10	9
		28 to 45 Degrees	1	56	56	56	52	48	44	37	32	28	24	21	19
			2	56	56	52	47	43	39	33	29	25	22	19	17
			3	39	35	32	29	26	24	21	18	15	13	12	10
	D	0 to 6 Degrees	1	54	54	54	50	45	41	35	30	26	22	20	17
			2	49	44	40	36	33	30	25	21	18	16	14	13
			3	34	31	28	25	23	21	18	15	13	11	10	9
		7 to 27 Degrees	1	44	44	44	41	37	34	29	25	21	19	16	14
			2	36	33	29	27	24	22	19	16	14	12	11	9
			3	30	27	24	22	20	18	15	13	11	10	9	8
		28 to 45 Degrees	1	56	54	49	44	40	37	31	27	23	20	18	16
			2	54	48	44	40	36	33	28	24	21	18	16	14
			3	33	30	27	24	22	20	17	15	13	11	10	9

Note: See SML "Roof Area" conversion chart and associated ASCE 7-16 Roof Zones on pages 4-10.

Gable Roof RT9	RT-[E] Mount Mini OSB Only Installations Cont. Maximum Mount Spacing in Inches													
Landscape Orientation - ASCE 7-16														
Snow Load	Exposure Category	Roof Angle	Roof Area	Basic Wind Speed, V (mph) 95	100	105	110	115	120	130	140	150	160	170	180
0 PSF	B	0 to 6 Degrees	1	96	93	83	74	67	61	51	43	37	32	28	25
			2	74	66	59	53	48	44	37	31	27	23	21	18
			3	51	45	41	37	33	30	26	22	19	16	14	13
		7 to 27 Degrees	1	83	74	66	60	54	50	42	36	31	27	24	21
			2	53	47	43	39	35	32	27	23	20	17	15	14
			3	43	38	35	31	29	26	22	19	16	14	13	11
		28 to 45 Degrees	1	84	76	68	62	57	52	44	38	33	29	25	23
			2	75	68	61	56	51	47	40	34	30	26	23	20
			3	47	42	38	34	31	29	24	21	18	16	14	12
	C	0 to 6 Degrees	1	71	63	56	51	46	42	35	30	26	22	20	17
			2	50	45	40	36	33	30	25	22	19	16	14	13
			3	35	31	28	25	23	21	18	15	13	11	10	9
		7 to 27 Degrees	1	57	51	46	41	38	34	29	25	21	19	16	15
			2	37	33	30	27	24	22	19	16	14	12	11	9
			3	30	27	24	22	20	18	15	13	11	10	9	8
		28 to 45 Degrees	1	59	53	48	44	40	37	31	27	23	20	18	16
			2	53	48	43	39	36	33	28	24	21	18	16	14
			3	33	30	27	24	22	20	17	15	13	11	10	9
	D	0 to 6 Degrees	1	58	52	47	42	38	35	29	25	22	19	16	15
			2	42	37	34	30	28	25	21	18	16	14	12	11
			3	29	26	23	21	19	18	15	13	11	10	8	7
		7 to 27 Degrees	1	47	42	38	35	31	29	24	21	18	16	14	12
			2	31	28	25	23	20	19	16	14	12	10	9	8
			3	25	23	20	18	17	15	13	11	10	8	7	6
		28 to 45 Degrees	1	50	45	41	37	34	31	26	23	20	17	15	13
			2	45	40	37	33	30	28	24	20	18	15	14	12
			3	28	25	23	20	19	17	14	12	11	9	8	7
1-10 PSF	B	0 to 6 Degrees	1	93	93	83	74	67	61	51	43	37	32	28	25
			2	74	66	59	53	48	44	37	31	27	23	21	18
			3	51	45	41	37	33	30	26	22	19	16	14	13
		7 to 27 Degrees	1	83	74	66	60	54	50	42	36	31	27	24	21
			2	53	47	43	39	35	32	27	23	20	17	15	14
			3	43	38	35	31	29	26	22	19	16	14	13	11
		28 to 45 Degrees	1	84	76	68	62	57	52	44	38	33	29	25	23
			2	75	68	61	56	51	47	40	34	30	26	23	20
			3	47	42	38	34	31	29	24	21	18	16	14	12
	C	0 to 6 Degrees	1	71	63	56	51	46	42	35	30	26	22	20	17
			2	50	45	40	36	33	30	25	22	19	16	14	13
			3	35	31	28	25	23	21	18	15	13	11	10	9
		7 to 27 Degrees	1	57	51	46	41	38	34	29	25	21	19	16	15
			2	37	33	30	27	24	22	19	16	14	12	11	9
			3	30	27	24	22	20	18	15	13	11	10	9	8
		28 to 45 Degrees	1	59	53	48	44	40	37	31	27	23	20	18	16
			2	53	48	43	39	36	33	28	24	21	18	16	14
			3	33	30	27	24	22	20	17	15	13	11	10	9
	D	0 to 6 Degrees	1	58	52	47	42	38	35	29	25	22	19	16	15
			2	42	37	34	30	28	25	21	18	16	14	12	11
			3	29	26	23	21	19	18	15	13	11	10	8	7
		7 to 27 Degrees	1	47	42	38	35	31	29	24	21	18	16	14	12
			2	31	28	25	23	20	19	16	14	12	10	9	8
			3	25	23	20	18	17	15	13	11	10	8	7	6
		28 to 45 Degrees	1	50	45	41	37	34	31	26	23	20	17	15	13
			2	45	40	37	33	30	28	24	20	18	15	14	12
			3	28	25	23	20	19	17	14	12	11	9	8	7
11-20 PSF	B	0 to 6 Degrees	1	65	65	65	65	65	61	51	43	37	32	28	25
			2	65	65	59	53	48	44	37	31	27	23	21	18
			3	51	45	41	37	33	30	26	22	19	16	14	13
		7 to 27 Degrees	1	59	59	59	59	54	50	42	36	31	27	24	21
			2	53	47	43	39	35	32	27	23	20	17	15	14
			3	43	38	35	31	29	26	22	19	16	14	13	11
		28 to 45 Degrees	1	70	70	68	62	57	52	44	38	33	29	25	23
			2	70	68	61	56	51	47	40	34	30	26	23	20
			3	47	42	38	34	31	29	24	21	18	16	14	12
	C	0 to 6 Degrees	1	65	63	56	51	46	42	35	30	26	22	20	17
			2	50	45	40	36	33	30	25	22	19	16	14	13
			3	35	31	28	25	23	21	18	15	13	11	10	9
		7 to 27 Degrees	1	57	51	46	41	38	34	29	25	21	19	16	15
			2	37	33	30	27	24	22	19	16	14	12	11	9
			3	30	27	24	22	20	18	15	13	11	10	9	8
		28 to 45 Degrees	1	59	53	48	44	40	37	31	27	23	20	18	16
			2	53	48	43	39	36	33	28	24	21	18	16	14
			3	33	30	27	24	22	20	17	15	13	11	10	9
	D	0 to 6 Degrees	1	58	52	47	42	38	35	29	25	22	19	16	15
			2	42	37	34	30	28	25	21	18	16	14	12	11
			3	29	26	23	21	19	18	15	13	11	10	8	7
		7 to 27 Degrees	1	47	42	38	35	31	29	24	21	18	16	14	12
			2	31	28	25	23	20	19	16	14	12	10	9	8
			3	25	23	20	18	17	15	13	11	10	8	7	6
		28 to 45 Degrees	1	50	45	41	37	34	31	26	23	20	17	15	13
			2	45	40	37	33	30	28	24	20	18	15	14	12
			3	28	25	23	20	19	17	14	12	11	9	8	7

Note: See SML "Roof Area" conversion chart and associated ASCE 7-16 Roof Zones on pages 4-10.

Gable Roof RT9

RT-[E] Mount Mini OSB Only Installations Cont.
Maximum Mount Spacing in Inches

Landscape Orientation - ASCE 7-16

Snow Load	Exposure Category	Roof Angle	Roof Area	Basic Wind Speed, V (mph) 95	100	105	110	115	120	130	140	150	160	170	180
21-30 PSF	B	0 to 6 Degrees	1	57	57	57	57	57	57	51	43	37	32	28	25
			2	57	57	57	53	48	44	37	31	27	23	21	18
			3	51	45	41	37	33	30	26	22	19	16	14	13
		7 to 27 Degrees	1	50	50	50	50	50	50	42	36	31	27	24	21
			2	50	47	43	39	35	32	27	23	20	17	15	14
			3	43	38	35	31	29	26	22	19	16	14	13	11
		28 to 45 Degrees	1	62	62	62	62	57	52	44	38	33	29	25	23
			2	62	62	61	56	51	47	40	34	30	26	23	20
			3	47	42	38	34	31	29	24	21	18	16	14	12
	C	0 to 6 Degrees	1	57	57	56	51	46	42	35	30	26	22	20	17
			2	50	45	40	36	33	30	25	22	19	16	14	13
			3	35	31	28	25	23	21	18	15	13	11	10	9
		7 to 27 Degrees	1	50	50	46	41	38	34	29	25	21	19	16	15
			2	37	33	30	27	24	22	19	16	14	12	11	9
			3	30	27	24	22	20	18	15	13	11	10	9	8
		28 to 45 Degrees	1	59	53	48	44	40	37	31	27	23	20	18	16
			2	53	48	43	39	36	33	28	24	21	18	16	14
			3	33	30	27	24	22	20	17	15	13	11	10	9
	D	0 to 6 Degrees	1	57	52	47	42	38	35	29	25	22	19	16	15
			2	42	37	34	30	28	25	21	18	16	14	12	11
			3	29	26	23	21	19	18	15	13	11	10	8	7
		7 to 27 Degrees	1	47	42	38	35	31	29	24	21	18	16	14	12
			2	31	28	25	23	20	19	16	14	12	10	9	8
			3	25	23	20	18	17	15	13	11	10	8	7	6
		28 to 45 Degrees	1	50	45	41	37	34	31	26	23	20	17	15	13
			2	45	40	37	33	30	28	24	20	18	15	14	12
			3	28	25	23	20	19	17	14	12	11	9	8	7
31-40 PSF	B	0 to 6 Degrees	1	44	44	44	44	44	44	44	43	37	32	28	25
			2	44	44	44	44	44	44	37	31	27	23	21	18
			3	44	44	41	37	33	30	26	22	19	16	14	13
		7 to 27 Degrees	1	39	39	39	39	39	39	39	36	31	27	24	21
			2	39	39	39	39	35	32	27	23	20	17	15	14
			3	39	38	35	31	29	26	22	19	16	14	13	11
		28 to 45 Degrees	1	52	52	52	52	52	51	44	38	33	29	25	23
			2	52	52	52	52	51	47	40	34	30	26	23	20
			3	47	42	38	34	31	29	24	21	18	16	14	12
	C	0 to 6 Degrees	1	44	44	44	44	44	42	35	30	26	22	20	17
			2	44	44	40	36	33	30	25	22	19	16	14	13
			3	35	31	28	25	23	21	18	15	13	11	10	9
		7 to 27 Degrees	1	39	39	39	39	38	34	29	25	21	19	16	15
			2	37	33	30	27	24	22	19	16	14	12	11	9
			3	30	27	24	22	20	18	15	13	11	10	9	8
		28 to 45 Degrees	1	52	51	48	44	40	37	31	27	23	20	18	16
			2	52	48	43	39	36	33	28	24	21	18	16	14
			3	33	30	27	24	22	20	17	15	13	11	10	9
	D	0 to 6 Degrees	1	44	44	44	42	38	35	29	25	22	19	16	15
			2	42	37	34	30	28	25	21	18	16	14	12	11
			3	29	26	23	21	19	18	15	13	11	10	8	7
		7 to 27 Degrees	1	39	39	38	35	31	29	24	21	18	16	14	12
			2	31	28	25	23	20	19	16	14	12	10	9	8
			3	25	23	20	18	17	15	13	11	10	8	7	6
		28 to 45 Degrees	1	50	45	41	37	34	31	26	23	20	17	15	13
			2	45	40	37	33	30	28	24	20	18	15	14	12
			3	28	25	23	20	19	17	14	12	11	9	8	7
41-50 PSF	B	0 to 6 Degrees	1	36	36	36	36	36	36	36	36	36	32	28	25
			2	36	36	36	36	36	36	36	31	27	23	21	18
			3	36	36	36	36	33	30	26	22	19	16	14	13
		7 to 27 Degrees	1	32	32	32	32	32	32	32	32	31	27	24	21
			2	32	32	32	32	32	32	27	23	20	17	15	14
			3	32	32	32	31	29	26	22	19	16	14	13	11
		28 to 45 Degrees	1	43	43	43	43	43	43	43	38	33	29	25	23
			2	43	43	43	43	43	43	40	34	30	26	23	20
			3	43	42	38	34	31	29	24	21	18	16	14	12
	C	0 to 6 Degrees	1	36	36	36	36	36	36	35	30	26	22	20	17
			2	36	36	36	36	33	30	25	22	19	16	14	13
			3	35	31	28	25	23	21	18	15	13	11	10	9
		7 to 27 Degrees	1	32	32	32	32	32	32	29	25	21	19	16	15
			2	32	32	30	27	24	22	19	16	14	12	11	9
			3	30	27	24	22	20	18	15	13	11	10	9	8
		28 to 45 Degrees	1	43	43	43	43	40	37	31	27	23	20	18	16
			2	43	43	43	39	36	33	28	24	21	18	16	14
			3	33	30	27	24	22	20	17	15	13	11	10	9
	D	0 to 6 Degrees	1	36	36	36	36	36	35	29	25	22	19	16	15
			2	36	36	34	30	28	25	21	18	16	14	12	11
			3	29	26	23	21	19	18	15	13	11	10	8	7
		7 to 27 Degrees	1	32	32	32	32	31	29	24	21	18	16	14	12
			2	31	28	25	23	20	19	16	14	12	10	9	8
			3	25	23	20	18	17	15	13	11	10	8	7	6
		28 to 45 Degrees	1	43	43	41	37	34	31	26	23	20	17	15	13
			2	43	40	37	33	30	28	24	20	18	15	14	12
			3	28	25	23	20	19	17	14	12	11	9	8	7

Note: See SML "Roof Area" conversion chart and associated ASCE 7-16 Roof Zones on pages 4-10.

Gable Roof RT9	RT-[E] Mount Mini OSB Only Installations Cont. Maximum Mount Spacing in Inches														
Landscape Orientation - ASCE 7-16															
Snow Load	Exposure Category	Roof Angle	Roof Area	Basic Wind Speed, V (mph)											
				95	100	105	110	115	120	130	140	150	160	170	180
51-60 PSF	B	0 to 6 Degrees	1	30	30	30	30	30	30	30	30	30	30	28	25
			2	30	30	30	30	30	30	30	30	27	23	21	18
			3	30	30	30	30	30	30	26	22	19	16	14	13
		7 to 27 Degrees	1	27	27	27	27	27	27	27	27	27	27	24	21
			2	27	27	27	27	27	27	27	23	20	17	15	14
			3	27	27	27	27	27	26	22	19	16	14	13	11
		28 to 45 Degrees	1	37	37	37	37	37	37	37	37	33	29	25	23
			2	37	37	37	37	37	37	37	34	30	26	23	20
			3	37	37	37	34	31	29	24	21	18	16	14	12
	C	0 to 6 Degrees	1	30	30	30	30	30	30	30	30	26	22	20	17
			2	30	30	30	30	30	30	25	22	19	16	14	13
			3	30	30	28	25	23	21	18	15	13	11	10	9
		7 to 27 Degrees	1	27	27	27	27	27	27	27	25	21	19	16	15
			2	27	27	27	27	24	22	19	16	14	12	11	9
			3	27	27	24	22	20	18	15	13	11	10	9	8
		28 to 45 Degrees	1	37	37	37	37	37	36	31	27	23	20	18	16
			2	37	37	37	37	36	33	28	24	21	18	16	14
			3	33	30	27	24	22	20	17	15	13	11	10	9
	D	0 to 6 Degrees	1	30	30	30	30	30	30	29	25	22	19	16	15
			2	30	30	30	30	28	25	21	18	16	14	12	11
			3	29	26	23	21	19	18	15	13	11	10	8	7
		7 to 27 Degrees	1	27	27	27	27	27	27	24	21	18	16	14	12
			2	27	27	25	23	20	19	16	14	12	10	9	8
			3	25	23	20	18	17	15	13	11	10	8	7	6
		28 to 45 Degrees	1	37	37	37	36	34	31	26	23	20	17	15	13
			2	37	37	37	33	30	28	24	20	18	15	14	12
			3	28	25	23	20	19	17	14	12	11	9	8	7
61-70 PSF	B	0 to 6 Degrees	1	26	26	26	26	26	26	26	26	26	26	26	25
			2	26	26	26	26	26	26	26	26	26	23	21	18
			3	26	26	26	26	26	26	26	22	19	16	14	13
		7 to 27 Degrees	1	23	23	23	23	23	23	23	23	23	23	23	21
			2	23	23	23	23	23	23	23	23	20	17	15	14
			3	23	23	23	23	23	23	22	19	16	14	13	11
		28 to 45 Degrees	1	32	32	32	32	32	32	32	32	32	29	25	23
			2	32	32	32	32	32	32	32	32	30	26	23	20
			3	32	32	32	32	31	29	24	21	18	16	14	12
	C	0 to 6 Degrees	1	26	26	26	26	26	26	26	26	26	22	20	17
			2	26	26	26	26	26	26	25	22	19	16	14	13
			3	26	26	26	25	23	21	18	15	13	11	10	9
		7 to 27 Degrees	1	23	23	23	23	23	23	23	23	21	19	16	15
			2	23	23	23	23	23	22	19	16	14	12	11	9
			3	23	23	23	22	20	18	15	13	11	10	9	8
		28 to 45 Degrees	1	32	32	32	32	32	32	31	27	23	20	18	16
			2	32	32	32	32	32	32	28	24	21	18	16	14
			3	32	30	27	24	22	20	17	15	13	11	10	9
	D	0 to 6 Degrees	1	26	26	26	26	26	26	26	25	22	19	16	15
			2	26	26	26	26	26	25	21	18	16	14	12	11
			3	26	26	23	21	19	18	15	13	11	10	8	7
		7 to 27 Degrees	1	23	23	23	23	23	23	23	21	18	16	14	12
			2	23	23	23	23	20	19	16	14	12	10	9	8
			3	23	23	20	18	17	15	13	11	10	8	7	6
		28 to 45 Degrees	1	32	32	32	32	32	31	26	23	20	17	15	13
			2	32	32	32	32	30	28	24	20	18	15	14	12
			3	28	25	23	20	19	17	14	12	11	9	8	7

Note: See SML "Roof Area" conversion chart and associated ASCE 7-16 Roof Zones on pages 4-10.

Also, Note that there is no table RT10. RT1 to RT9 are for Gable Roofs and RT11 to RT19 are for Hip Roofs.

Hip Roof RT11	RT-[E] Mount Mini Rafter Installations (60 Cell PV Panels) Maximum Mount Spacing in Inches													
	Portrait Orientation - ASCE 7-16													
Snow Load	Exposure Category	Roof Angle	Roof Area	Basic Wind Speed, V (mph) 95	100	105	110	115	120	130	140	150	160	170	180
0 PSF	B	7 to 20 Degrees	1	96	96	96	96	96	94	79	68	59	51	45	40
			2	96	96	92	83	76	69	59	50	43	38	33	30
			3	96	94	85	77	70	64	54	46	40	35	31	27
		20 to 27 Degrees	1	96	96	96	96	96	96	96	86	75	66	58	51
			2	96	96	96	96	90	82	70	60	52	45	40	36
			3	0	0	0	0	0	0	0	0	0	0	0	0
		27 to 45 Degrees	1	96	96	96	96	96	96	88	76	67	59	52	46
			2	89	80	73	66	61	56	48	41	36	31	28	25
			3	69	63	57	52	47	43	37	32	28	24	22	19
	C	7 to 20 Degrees	1	96	96	87	79	72	66	56	48	41	36	32	28
			2	80	71	64	58	53	49	41	35	31	27	24	21
			3	73	66	59	54	49	45	38	32	28	25	22	19
		20 to 27 Degrees	1	96	96	96	96	92	84	71	61	53	46	41	36
			2	94	85	76	69	63	58	49	42	37	32	28	25
			3	0	0	0	0	0	0	0	0	0	0	0	0
		27 to 45 Degrees	1	96	96	96	88	81	74	63	55	48	42	37	33
			2	64	57	52	47	43	40	34	29	25	22	20	18
			3	49	45	40	37	34	31	26	23	20	17	15	14
	D	7 to 20 Degrees	1	90	81	73	66	60	55	47	40	35	30	27	24
			2	67	60	54	49	45	41	35	30	26	22	20	18
			3	61	55	50	45	41	38	32	27	24	21	18	16
		20 to 27 Degrees	1	96	96	93	84	77	70	60	51	44	39	34	30
			2	79	71	64	58	53	49	41	35	31	27	24	21
			3	0	0	0	0	0	0	0	0	0	0	0	0
		27 to 45 Degrees	1	96	90	82	75	68	63	54	46	40	35	31	28
			2	54	49	44	40	37	34	29	25	21	19	17	15
			3	42	38	34	31	28	26	22	19	17	15	13	11
1-10 PSF	B	7 to 20 Degrees	1	96	96	96	96	96	94	79	68	59	51	45	40
			2	96	96	92	83	76	69	59	50	43	38	33	30
			3	96	94	85	77	70	64	54	46	40	35	31	27
		20 to 27 Degrees	1	96	96	96	96	96	96	96	86	75	66	58	51
			2	96	96	96	96	90	82	70	60	52	45	40	36
			3	0	0	0	0	0	0	0	0	0	0	0	0
		27 to 45 Degrees	1	96	96	96	96	96	96	88	76	67	59	52	46
			2	89	80	73	66	61	56	48	41	36	31	28	25
			3	69	63	57	52	47	43	37	32	28	24	22	19
	C	7 to 20 Degrees	1	96	96	87	79	72	66	56	48	41	36	32	28
			2	80	71	64	58	53	49	41	35	31	27	24	21
			3	73	66	59	54	49	45	38	32	28	25	22	19
		20 to 27 Degrees	1	96	96	96	96	92	84	71	61	53	46	41	36
			2	94	85	76	69	63	58	49	42	37	32	28	25
			3	0	0	0	0	0	0	0	0	0	0	0	0
		27 to 45 Degrees	1	96	96	96	88	81	74	63	55	48	42	37	33
			2	64	57	52	47	43	40	34	29	25	22	20	18
			3	49	45	40	37	34	31	26	23	20	17	15	14
	D	7 to 20 Degrees	1	90	81	73	66	60	55	47	40	35	30	27	24
			2	67	60	54	49	45	41	35	30	26	22	20	18
			3	61	55	50	45	41	38	32	27	24	21	18	16
		20 to 27 Degrees	1	96	96	93	84	77	70	60	51	44	39	34	30
			2	79	71	64	58	53	49	41	35	31	27	24	21
			3	0	0	0	0	0	0	0	0	0	0	0	0
		27 to 45 Degrees	1	96	90	82	75	68	63	54	46	40	35	31	28
			2	54	49	44	40	37	34	29	25	21	19	17	15
			3	42	38	34	31	28	26	22	19	17	15	13	11
11-20 PSF	B	7 to 20 Degrees	1	96	96	96	96	96	94	79	68	59	51	45	40
			2	96	96	92	83	76	69	59	50	43	38	33	30
			3	96	94	85	77	70	64	54	46	40	35	31	27
		20 to 27 Degrees	1	96	96	96	96	96	96	96	86	75	66	58	51
			2	96	96	96	96	90	82	70	60	52	45	40	36
			3	0	0	0	0	0	0	0	0	0	0	0	0
		27 to 45 Degrees	1	96	96	96	96	96	96	88	76	67	59	52	46
			2	89	80	73	66	61	56	48	41	36	31	28	25
			3	69	63	57	52	47	43	37	32	28	24	22	19
	C	7 to 20 Degrees	1	96	96	87	79	72	66	56	48	41	36	32	28
			2	80	71	64	58	53	49	41	35	31	27	24	21
			3	73	66	59	54	49	45	38	32	28	25	22	19
		20 to 27 Degrees	1	96	96	96	96	92	84	71	61	53	46	41	36
			2	94	85	76	69	63	58	49	42	37	32	28	25
			3	0	0	0	0	0	0	0	0	0	0	0	0
		27 to 45 Degrees	1	96	96	96	88	81	74	63	55	48	42	37	33
			2	64	57	52	47	43	40	34	29	25	22	20	18
			3	49	45	40	37	34	31	26	23	20	17	15	14
	D	7 to 20 Degrees	1	90	81	73	66	60	55	47	40	35	30	27	24
			2	67	60	54	49	45	41	35	30	26	22	20	18
			3	61	55	50	45	41	38	32	27	24	21	18	16
		20 to 27 Degrees	1	96	96	93	84	77	70	60	51	44	39	34	30
			2	79	71	64	58	53	49	41	35	31	27	24	21
			3	0	0	0	0	0	0	0	0	0	0	0	0
		27 to 45 Degrees	1	96	90	82	75	68	63	54	46	40	35	31	28
			2	54	49	44	40	37	34	29	25	21	19	17	15
			3	42	38	34	31	28	26	22	19	17	15	13	11

Note: See SML "Roof Area" conversion chart and associated ASCE 7-16 Roof Zones on pages 4-10.

Hip Roof RT11

RT-[E] Mount Mini Rafter Installations (60 Cell PV Panels) Maximum Mount Spacing in Inches

Portrait Orientation - ASCE 7-16

Snow Load	Exposure Category	Roof Angle	Roof Area	Basic Wind Speed, V (mph) 95	100	105	110	115	120	130	140	150	160	170	180
21-30 PSF	B	7 to 20 Degrees	1	96	96	96	96	96	94	79	68	59	51	45	40
			2	96	96	92	83	76	69	59	50	43	38	33	30
			3	96	94	85	77	70	64	54	46	40	35	31	27
		20 to 27 Degrees	1	96	96	96	96	96	96	96	86	75	66	58	51
			2	96	96	96	96	90	82	70	60	52	45	40	36
			3	0	0	0	0	0	0	0	0	0	0	0	0
		27 to 45 Degrees	1	96	96	96	96	96	96	88	76	67	59	52	46
			2	89	80	73	66	61	56	48	41	36	31	28	25
			3	69	63	57	52	47	43	37	32	28	24	22	19
	C	7 to 20 Degrees	1	96	96	87	79	72	66	56	48	41	36	32	28
			2	80	71	64	58	53	49	41	35	31	27	24	21
			3	73	66	59	54	49	45	38	32	28	25	22	19
		20 to 27 Degrees	1	96	96	96	96	92	84	71	61	53	46	41	36
			2	94	85	76	69	63	58	49	42	37	32	28	25
			3	0	0	0	0	0	0	0	0	0	0	0	0
		27 to 45 Degrees	1	96	96	96	88	81	74	63	55	48	42	37	33
			2	64	57	52	47	43	40	34	29	25	22	20	18
			3	49	45	40	37	34	31	26	23	20	17	15	14
	D	7 to 20 Degrees	1	90	81	73	66	60	55	47	40	35	30	27	24
			2	67	60	54	49	45	41	35	30	26	22	20	18
			3	61	55	50	45	41	38	32	27	24	21	18	16
		20 to 27 Degrees	1	96	96	93	84	77	70	60	51	44	39	34	30
			2	79	71	64	58	53	49	41	35	31	27	24	21
			3	0	0	0	0	0	0	0	0	0	0	0	0
		27 to 45 Degrees	1	96	90	82	75	68	63	54	46	40	35	31	28
			2	54	49	44	40	37	34	29	25	21	19	17	15
			3	42	38	34	31	28	26	22	19	17	15	13	11
31-40 PSF	B	7 to 20 Degrees	1	96	96	96	96	96	94	79	68	59	51	45	40
			2	96	96	92	83	76	69	59	50	43	38	33	30
			3	96	94	85	77	70	64	54	46	40	35	31	27
		20 to 27 Degrees	1	96	96	96	96	96	96	96	86	75	66	58	51
			2	96	96	96	96	90	82	70	60	52	45	40	36
			3	0	0	0	0	0	0	0	0	0	0	0	0
		27 to 45 Degrees	1	96	96	96	96	96	96	88	76	67	59	52	46
			2	89	80	73	66	61	56	48	41	36	31	28	25
			3	69	63	57	52	47	43	37	32	28	24	22	19
	C	7 to 20 Degrees	1	96	96	87	79	72	66	56	48	41	36	32	28
			2	80	71	64	58	53	49	41	35	31	27	24	21
			3	73	66	59	54	49	45	38	32	28	25	22	19
		20 to 27 Degrees	1	96	96	96	96	92	84	71	61	53	46	41	36
			2	94	85	76	69	63	58	49	42	37	32	28	25
			3	0	0	0	0	0	0	0	0	0	0	0	0
		27 to 45 Degrees	1	96	96	96	88	81	74	63	55	48	42	37	33
			2	64	57	52	47	43	40	34	29	25	22	20	18
			3	49	45	40	37	34	31	26	23	20	17	15	14
	D	7 to 20 Degrees	1	90	81	73	66	60	55	47	40	35	30	27	24
			2	67	60	54	49	45	41	35	30	26	22	20	18
			3	61	55	50	45	41	38	32	27	24	21	18	16
		20 to 27 Degrees	1	96	96	93	84	77	70	60	51	44	39	34	30
			2	79	71	64	58	53	49	41	35	31	27	24	21
			3	0	0	0	0	0	0	0	0	0	0	0	0
		27 to 45 Degrees	1	96	90	82	75	68	63	54	46	40	35	31	28
			2	54	49	44	40	37	34	29	25	21	19	17	15
			3	42	38	34	31	28	26	22	19	17	15	13	11
41-50 PSF	B	7 to 20 Degrees	1	96	96	96	96	96	94	79	68	59	51	45	40
			2	96	96	92	83	76	69	59	50	43	38	33	30
			3	96	94	85	77	70	64	54	46	40	35	31	27
		20 to 27 Degrees	1	96	96	96	96	96	96	96	86	75	66	58	51
			2	96	96	96	96	90	82	70	60	52	45	40	36
			3	0	0	0	0	0	0	0	0	0	0	0	0
		27 to 45 Degrees	1	96	96	96	96	96	96	88	76	67	59	52	46
			2	89	80	73	66	61	56	48	41	36	31	28	25
			3	69	63	57	52	47	43	37	32	28	24	22	19
	C	7 to 20 Degrees	1	96	96	87	79	72	66	56	48	41	36	32	28
			2	80	71	64	58	53	49	41	35	31	27	24	21
			3	73	66	59	54	49	45	38	32	28	25	22	19
		20 to 27 Degrees	1	96	96	96	96	92	84	71	61	53	46	41	36
			2	94	85	76	69	63	58	49	42	37	32	28	25
			3	0	0	0	0	0	0	0	0	0	0	0	0
		27 to 45 Degrees	1	96	96	96	88	81	74	63	55	48	42	37	33
			2	64	57	52	47	43	40	34	29	25	22	20	18
			3	49	45	40	37	34	31	26	23	20	17	15	14
	D	7 to 20 Degrees	1	90	81	73	66	60	55	47	40	35	30	27	24
			2	67	60	54	49	45	41	35	30	26	22	20	18
			3	61	55	50	45	41	38	32	27	24	21	18	16
		20 to 27 Degrees	1	96	96	93	84	77	70	60	51	44	39	34	30
			2	79	71	64	58	53	49	41	35	31	27	24	21
			3	0	0	0	0	0	0	0	0	0	0	0	0
		27 to 45 Degrees	1	96	90	82	75	68	63	54	46	40	35	31	28
			2	54	49	44	40	37	34	29	25	21	19	17	15
			3	42	38	34	31	28	26	22	19	17	15	13	11

Note: See SML "Roof Area" conversion chart and associated ASCE 7-16 Roof Zones on pages 4-10.

Hip Roof RT11	RT-[E] Mount Mini Rafter Installations (60 Cell PV Panels) Maximum Mount Spacing in Inches														
	Portrait Orientation - ASCE 7-16														
Snow Load	Exposure Category	Roof Angle	Roof Area	Basic Wind Speed, V (mph)											
				95	100	105	110	115	120	130	140	150	160	170	180
51-60 PSF	B	7 to 20 Degrees	1	96	96	96	96	96	94	79	68	59	51	45	40
			2	96	96	92	83	76	69	59	50	43	38	33	30
			3	96	94	85	77	70	64	54	46	40	35	31	27
		20 to 27 Degrees	1	84	84	84	84	84	84	84	84	75	66	58	51
			2	84	84	84	84	84	82	70	60	52	45	40	36
			3	0	0	0	0	0	0	0	0	0	0	0	0
		27 to 45 Degrees	1	85	85	85	85	85	85	85	76	67	59	52	46
			2	85	80	73	66	61	56	48	41	36	31	28	25
			3	69	63	57	52	47	43	37	32	28	24	22	19
	C	7 to 20 Degrees	1	96	96	87	79	72	66	56	48	41	36	32	28
			2	80	71	64	58	53	49	41	35	31	27	24	21
			3	73	66	59	54	49	45	38	32	28	25	22	19
		20 to 27 Degrees	1	84	84	84	84	84	84	71	61	53	46	41	36
			2	84	84	76	69	63	58	49	42	37	32	28	25
			3	0	0	0	0	0	0	0	0	0	0	0	0
		27 to 45 Degrees	1	85	85	85	85	81	74	63	55	48	42	37	33
			2	64	57	52	47	43	40	34	29	25	22	20	18
			3	49	45	40	37	34	31	26	23	20	17	15	14
	D	7 to 20 Degrees	1	90	81	73	66	72	55	47	40	35	30	27	24
			2	67	60	54	49	45	41	35	30	26	22	20	18
			3	61	55	50	45	41	38	32	27	24	21	18	16
		20 to 27 Degrees	1	84	84	84	84	77	70	60	51	44	39	34	30
			2	79	71	64	58	53	49	41	35	31	27	24	21
			3	0	0	0	0	0	0	0	0	0	0	0	0
		27 to 45 Degrees	1	85	85	82	75	68	63	54	46	40	35	31	28
			2	54	49	44	40	37	34	29	25	21	19	17	15
			3	42	38	34	31	28	26	22	19	17	15	13	11
61-70 PSF	B	7 to 20 Degrees	1	84	84	84	84	84	84	79	68	59	51	45	40
			2	84	84	84	83	76	69	59	50	43	38	33	30
			3	84	84	84	77	70	64	54	46	40	35	31	27
		20 to 27 Degrees	1	73	73	73	73	73	73	73	73	73	66	58	51
			2	73	73	73	73	73	73	70	60	52	45	40	36
			3	0	0	0	0	0	0	0	0	0	0	0	0
		27 to 45 Degrees	1	74	74	74	74	74	74	74	74	67	59	52	46
			2	74	74	73	66	61	56	48	41	36	31	28	25
			3	69	63	57	52	47	43	37	32	28	24	22	19
	C	7 to 20 Degrees	1	84	84	84	79	72	66	56	48	41	36	32	28
			2	80	71	64	58	53	49	41	35	31	27	24	21
			3	73	66	59	54	49	45	38	32	28	25	22	19
		20 to 27 Degrees	1	73	73	73	73	73	73	71	61	53	46	41	36
			2	73	73	73	69	63	58	49	42	37	32	28	25
			3	0	0	0	0	0	0	0	0	0	0	0	0
		27 to 45 Degrees	1	74	74	74	74	74	74	63	55	48	42	37	33
			2	64	57	52	47	43	40	34	29	25	22	20	18
			3	49	45	40	37	34	31	26	23	20	17	15	14
	D	7 to 20 Degrees	1	84	81	73	66	60	55	47	40	35	30	27	24
			2	67	60	54	49	45	41	35	30	26	22	20	18
			3	61	55	50	45	41	38	32	27	24	21	18	16
		20 to 27 Degrees	1	73	73	73	73	73	70	60	51	44	39	34	30
			2	73	71	64	58	53	49	41	35	31	27	24	21
			3	0	0	0	0	0	0	0	0	0	0	0	0
		27 to 45 Degrees	1	74	74	74	74	68	63	54	46	40	35	31	28
			2	54	49	44	40	37	34	29	25	21	19	17	15
			3	42	38	34	31	28	26	22	19	17	15	13	11

Note: See SML "Roof Area" conversion chart and associated ASCE 7-16 Roof Zones on pages 4-10.

Hip Roof RT12	RT-[E] Mount Mini Rafter Installations (72 Cell PV Panels) Maximum Mount Spacing in Inches													
	Portrait Orientation - ASCE 7-16													
Snow Load	Exposure Category	Roof Angle	Roof Area	Basic Wind Speed, V (mph) 95	100	105	110	115	120	130	140	150	160	170	180
0 PSF	B	7 to 20 Degrees	1	96	96	96	96	90	83	70	59	51	45	40	35
			2	96	90	81	73	67	61	51	44	38	33	29	26
			3	92	82	74	67	61	56	47	40	35	31	27	24
		20 to 27 Degrees	1	96	96	96	96	96	96	89	76	66	57	51	45
			2	96	96	95	86	79	72	61	52	45	40	35	31
			3	0	0	0	0	0	0	0	0	0	0	0	0
		27 to 45 Degrees	1	96	96	96	96	96	91	78	67	58	51	46	41
			2	78	70	64	58	53	49	42	36	31	27	24	22
			3	61	55	50	45	41	38	32	28	24	21	19	17
	C	7 to 20 Degrees	1	95	85	77	69	63	58	49	42	36	32	28	25
			2	70	63	56	51	47	43	36	31	27	23	21	18
			3	64	57	52	47	43	39	33	28	25	22	19	17
		20 to 27 Degrees	1	96	96	96	88	80	73	62	53	46	40	36	32
			2	82	74	67	61	55	51	43	37	32	28	25	22
			3	0	0	0	0	0	0	0	0	0	0	0	0
		27 to 45 Degrees	1	96	93	85	77	71	65	55	48	42	37	32	29
			2	56	50	46	42	38	35	30	26	22	19	17	15
			3	43	39	35	32	30	27	23	20	17	15	13	12
	D	7 to 20 Degrees	1	79	71	64	58	53	48	41	35	30	26	23	21
			2	58	52	47	43	39	36	30	26	22	20	17	15
			3	54	48	43	39	36	33	28	24	21	18	16	14
		20 to 27 Degrees	1	96	90	81	74	67	62	52	45	39	34	30	27
			2	69	62	56	51	47	43	36	31	27	24	21	18
			3	0	0	0	0	0	0	0	0	0	0	0	0
		27 to 45 Degrees	1	87	79	72	65	60	55	47	40	35	31	27	24
			2	47	42	39	35	32	29	25	22	19	16	14	13
			3	37	33	30	27	25	23	19	17	14	13	11	10
1-10 PSF	B	7 to 20 Degrees	1	96	96	96	96	90	83	70	59	51	45	40	35
			2	96	90	81	73	67	61	51	44	38	33	29	26
			3	92	82	74	67	61	56	47	40	35	31	27	24
		20 to 27 Degrees	1	96	96	96	96	96	96	89	76	66	57	51	45
			2	96	96	95	86	79	72	61	52	45	40	35	31
			3	0	0	0	0	0	0	0	0	0	0	0	0
		27 to 45 Degrees	1	96	96	96	96	96	91	78	67	58	51	46	41
			2	78	70	64	58	53	49	42	36	31	27	24	22
			3	61	55	50	45	41	38	32	28	24	21	19	17
	C	7 to 20 Degrees	1	95	85	77	69	63	58	49	42	36	32	28	25
			2	70	63	56	51	47	43	36	31	27	23	21	18
			3	64	57	52	47	43	39	33	28	25	22	19	17
		20 to 27 Degrees	1	96	96	96	88	80	73	62	53	46	40	36	32
			2	82	74	67	61	55	51	43	37	32	28	25	22
			3	0	0	0	0	0	0	0	0	0	0	0	0
		27 to 45 Degrees	1	96	93	85	77	71	65	55	48	42	37	32	29
			2	56	50	46	42	38	35	30	26	22	19	17	15
			3	43	39	35	32	30	27	23	20	17	15	13	12
	D	7 to 20 Degrees	1	79	71	64	58	53	48	41	35	30	26	23	21
			2	58	52	47	43	39	36	30	26	22	20	17	15
			3	54	48	43	39	36	33	28	24	21	18	16	14
		20 to 27 Degrees	1	96	90	81	74	67	62	52	45	39	34	30	27
			2	69	62	56	51	47	43	36	31	27	24	21	18
			3	0	0	0	0	0	0	0	0	0	0	0	0
		27 to 45 Degrees	1	87	79	72	65	60	55	47	40	35	31	27	24
			2	47	42	39	35	32	29	25	22	19	16	14	13
			3	37	33	30	27	25	23	19	17	14	13	11	10
11-20 PSF	B	7 to 20 Degrees	1	96	96	96	96	90	83	70	59	51	45	40	35
			2	96	90	81	73	67	61	51	44	38	33	29	26
			3	92	82	74	67	61	56	47	40	35	31	27	24
		20 to 27 Degrees	1	96	96	96	96	96	96	89	76	66	57	51	45
			2	96	96	95	86	79	72	61	52	45	40	35	31
			3	0	0	0	0	0	0	0	0	0	0	0	0
		27 to 45 Degrees	1	96	96	96	96	96	91	78	67	58	51	46	41
			2	78	70	64	58	53	49	42	36	31	27	24	22
			3	61	55	50	45	41	38	32	28	24	21	19	17
	C	7 to 20 Degrees	1	95	85	77	69	63	58	49	42	36	32	28	25
			2	70	63	56	51	47	43	36	31	27	23	21	18
			3	64	57	52	47	43	39	33	28	25	22	19	17
		20 to 27 Degrees	1	96	96	96	88	80	73	62	53	46	40	36	32
			2	82	74	67	61	55	51	43	37	32	28	25	22
			3	0	0	0	0	0	0	0	0	0	0	0	0
		27 to 45 Degrees	1	96	93	85	77	71	65	55	48	42	37	32	29
			2	56	50	46	42	38	35	30	26	22	19	17	15
			3	43	39	35	32	30	27	23	20	17	15	13	12
	D	7 to 20 Degrees	1	79	71	64	58	53	48	41	35	30	26	23	21
			2	58	52	47	43	39	36	30	26	22	20	17	15
			3	54	48	43	39	36	33	28	24	21	18	16	14
		20 to 27 Degrees	1	96	90	81	74	67	62	52	45	39	34	30	27
			2	69	62	56	51	47	43	36	31	27	24	21	18
			3	0	0	0	0	0	0	0	0	0	0	0	0
		27 to 45 Degrees	1	87	79	72	65	60	55	47	40	35	31	27	24
			2	47	42	39	35	32	29	25	22	19	16	14	13
			3	37	33	30	27	25	23	19	17	14	13	11	10

Note: See SML "Roof Area" conversion chart and associated ASCE 7-16 Roof Zones on pages 4-10.

Hip Roof RT12

RT-[E] Mount Mini Rafter Installations
(72 Cell PV Panels)
Maximum Mount Spacing in Inches

Portrait Orientation - ASCE 7-16

Snow Load	Exposure Category	Roof Angle	Roof Area	Basic Wind Speed, V (mph) 95	100	105	110	115	120	130	140	150	160	170	180
21-30 PSF	B	7 to 20 Degrees	1	96	96	96	96	90	83	70	59	51	45	40	35
			2	96	90	81	73	67	61	51	44	38	33	29	26
			3	92	82	74	67	61	56	47	40	35	31	27	24
		20 to 27 Degrees	1	96	96	96	96	96	96	89	76	66	57	51	45
			2	96	96	95	86	79	72	61	52	45	40	35	31
			3	0	0	0	0	0	0	0	0	0	0	0	0
		27 to 45 Degrees	1	96	96	96	96	96	91	78	67	58	51	46	41
			2	78	70	64	58	53	49	42	36	31	27	24	22
			3	61	55	50	45	41	38	32	28	24	21	19	17
	C	7 to 20 Degrees	1	95	85	77	69	63	58	49	42	36	32	28	25
			2	70	63	56	51	47	43	36	31	27	23	21	18
			3	64	57	52	47	43	39	33	28	25	22	19	17
		20 to 27 Degrees	1	96	96	96	88	80	73	62	53	46	40	36	32
			2	82	74	67	61	55	51	43	37	32	28	25	22
			3	0	0	0	0	0	0	0	0	0	0	0	0
		27 to 45 Degrees	1	96	93	85	77	71	65	55	48	42	37	32	29
			2	56	50	46	42	38	35	30	26	22	19	17	15
			3	43	39	35	32	30	27	23	20	17	15	13	12
	D	7 to 20 Degrees	1	79	71	64	58	53	48	41	35	30	26	23	21
			2	58	52	47	43	39	36	30	26	22	20	17	15
			3	54	48	43	39	36	33	28	24	21	18	16	14
		20 to 27 Degrees	1	96	90	81	74	67	62	52	45	39	34	30	27
			2	69	62	56	51	47	43	36	31	27	24	21	18
			3	0	0	0	0	0	0	0	0	0	0	0	0
		27 to 45 Degrees	1	87	79	72	65	60	55	47	40	35	31	27	24
			2	47	42	39	35	32	29	25	22	19	16	14	13
			3	37	33	30	27	25	23	19	17	14	13	11	10
31-40 PSF	B	7 to 20 Degrees	1	96	96	96	96	90	83	70	59	51	45	40	35
			2	96	90	81	73	67	61	51	44	38	33	29	26
			3	92	82	74	67	61	56	47	40	35	31	27	24
		20 to 27 Degrees	1	96	96	96	96	96	96	89	76	66	57	51	45
			2	96	96	95	86	79	72	61	52	45	40	35	31
			3	0	0	0	0	0	0	0	0	0	0	0	0
		27 to 45 Degrees	1	96	96	96	96	96	91	78	67	58	51	46	41
			2	78	70	64	58	53	49	42	36	31	27	24	22
			3	61	55	50	45	41	38	32	28	24	21	19	17
	C	7 to 20 Degrees	1	95	85	77	69	63	58	49	42	36	32	28	25
			2	70	63	56	51	47	43	36	31	27	23	21	18
			3	64	57	52	47	43	39	33	28	25	22	19	17
		20 to 27 Degrees	1	96	96	96	88	80	73	62	53	46	40	36	32
			2	82	74	67	61	55	51	43	37	32	28	25	22
			3	0	0	0	0	0	0	0	0	0	0	0	0
		27 to 45 Degrees	1	96	93	85	77	71	65	55	48	42	37	32	29
			2	56	50	46	42	38	35	30	26	22	19	17	15
			3	43	39	35	32	30	27	23	20	17	15	13	12
	D	7 to 20 Degrees	1	79	71	64	58	53	48	41	35	30	26	23	21
			2	58	52	47	43	39	36	30	26	22	20	17	15
			3	54	48	43	39	36	33	28	24	21	18	16	14
		20 to 27 Degrees	1	96	90	81	74	67	62	52	45	39	34	30	27
			2	69	62	56	51	47	43	36	31	27	24	21	18
			3	0	0	0	0	0	0	0	0	0	0	0	0
		27 to 45 Degrees	1	87	79	72	65	60	55	47	40	35	31	27	24
			2	47	42	39	35	32	29	25	22	19	16	14	13
			3	37	33	30	27	25	23	19	17	14	13	11	10
41-50 PSF	B	7 to 20 Degrees	1	96	96	96	96	90	83	70	59	51	45	40	35
			2	96	90	81	73	67	61	51	44	38	33	29	26
			3	92	82	74	67	61	56	47	40	35	31	27	24
		20 to 27 Degrees	1	87	87	87	87	87	87	87	76	66	57	51	45
			2	87	87	87	86	79	72	61	52	45	40	35	31
			3	0	0	0	0	0	0	0	0	0	0	0	0
		27 to 45 Degrees	1	87	87	87	87	87	87	78	67	58	51	46	41
			2	78	70	64	58	53	49	42	36	31	27	24	22
			3	61	55	50	45	41	38	32	28	24	21	19	17
	C	7 to 20 Degrees	1	95	85	77	69	63	58	49	42	36	32	28	25
			2	70	63	56	51	47	43	36	31	27	23	21	18
			3	64	57	52	47	43	39	33	28	25	22	19	17
		20 to 27 Degrees	1	87	87	87	87	80	73	62	53	46	40	36	32
			2	82	74	67	61	55	51	43	37	32	28	25	22
			3	0	0	0	0	0	0	0	0	0	0	0	0
		27 to 45 Degrees	1	87	87	85	77	71	65	55	48	42	37	32	29
			2	56	50	46	42	38	35	30	26	22	19	17	15
			3	43	39	35	32	30	27	23	20	17	15	13	12
	D	7 to 20 Degrees	1	79	71	64	58	53	48	41	35	30	26	23	21
			2	58	52	47	43	39	36	30	26	22	20	17	15
			3	54	48	43	39	36	33	28	24	21	18	16	14
		20 to 27 Degrees	1	87	87	81	74	67	62	52	45	39	34	30	27
			2	69	62	56	51	47	43	36	31	27	24	21	18
			3	0	0	0	0	0	0	0	0	0	0	0	0
		27 to 45 Degrees	1	87	79	72	65	60	55	47	40	35	31	27	24
			2	47	42	39	35	32	29	25	22	19	16	14	13
			3	37	33	30	27	25	23	19	17	14	13	11	10

Note: See SML "Roof Area" conversion chart and associated ASCE 7-16 Roof Zones on pages 4-10.

Hip Roof RT12	RT-[E] Mount Mini Rafter Installations (72 Cell PV Panels) Maximum Mount Spacing in Inches													
	Portrait Orientation - ASCE 7-16													
Snow Load	Exposure Category	Roof Angle	Roof Area	Basic Wind Speed, V (mph) 95	100	105	110	115	120	130	140	150	160	170	180
51-60 PSF	B	7 to 20 Degrees	1	85	85	85	85	85	83	70	59	51	45	40	35
			2	85	85	81	73	67	61	51	44	38	33	29	26
			3	85	82	74	67	61	56	47	40	35	31	27	24
		20 to 27 Degrees	1	74	74	74	74	74	74	74	74	66	57	51	45
			2	74	74	74	74	74	72	61	52	45	40	35	31
			3	0	0	0	0	0	0	0	0	0	0	0	0
		27 to 45 Degrees	1	75	75	75	75	75	75	75	67	58	51	46	41
			2	75	70	64	58	53	49	42	36	31	27	24	22
			3	61	55	50	45	41	38	32	28	24	21	19	17
	C	7 to 20 Degrees	1	85	85	77	69	63	58	49	42	36	32	28	25
			2	70	63	56	51	47	43	36	31	27	23	21	18
			3	64	57	52	47	43	39	33	28	25	22	19	17
		20 to 27 Degrees	1	74	74	74	74	74	73	62	53	46	40	36	32
			2	74	74	67	61	55	51	43	37	32	28	25	22
			3	0	0	0	0	0	0	0	0	0	0	0	0
		27 to 45 Degrees	1	75	75	75	75	71	65	55	48	42	37	32	29
			2	56	50	46	42	38	35	30	26	22	19	17	15
			3	43	39	35	32	30	27	23	20	17	15	13	12
	D	7 to 20 Degrees	1	79	71	64	58	63	48	41	35	30	26	23	21
			2	58	52	47	43	39	36	30	26	22	20	17	15
			3	54	48	43	39	36	33	28	24	21	18	16	14
		20 to 27 Degrees	1	74	74	74	74	67	62	52	45	39	34	30	27
			2	69	62	56	51	47	43	36	31	27	24	21	18
			3	0	0	0	0	0	0	0	0	0	0	0	0
		27 to 45 Degrees	1	75	75	72	65	60	55	47	40	35	31	27	24
			2	47	42	39	35	32	29	25	22	19	16	14	13
			3	37	33	30	27	25	23	19	17	14	13	11	10
61-70 PSF	B	7 to 20 Degrees	1	74	74	74	74	74	74	70	59	51	45	40	35
			2	74	74	74	73	67	61	51	44	38	33	29	26
			3	74	74	74	67	61	56	47	40	35	31	27	24
		20 to 27 Degrees	1	64	64	64	64	64	64	64	64	64	57	51	45
			2	64	64	64	64	64	64	61	52	45	40	35	31
			3	0	0	0	0	0	0	0	0	0	0	0	0
		27 to 45 Degrees	1	65	65	65	65	65	65	65	65	58	51	46	41
			2	65	65	64	58	53	49	42	36	31	27	24	22
			3	61	55	50	45	41	38	32	28	24	21	19	17
	C	7 to 20 Degrees	1	74	74	74	69	63	58	49	42	36	32	28	25
			2	70	63	56	51	47	43	36	31	27	23	21	18
			3	64	57	52	47	43	39	33	28	25	22	19	17
		20 to 27 Degrees	1	64	64	64	64	64	64	62	53	46	40	36	32
			2	64	64	64	61	55	51	43	37	32	28	25	22
			3	0	0	0	0	0	0	0	0	0	0	0	0
		27 to 45 Degrees	1	65	65	65	65	65	65	55	48	42	37	32	29
			2	56	50	46	42	38	35	30	26	22	19	17	15
			3	43	39	35	32	30	27	23	20	17	15	13	12
	D	7 to 20 Degrees	1	74	71	64	58	53	48	41	35	30	26	23	21
			2	58	52	47	43	39	36	30	26	22	20	17	15
			3	54	48	43	39	36	33	28	24	21	18	16	14
		20 to 27 Degrees	1	64	64	64	64	64	62	52	45	39	34	30	27
			2	64	62	56	51	47	43	36	31	27	24	21	18
			3	0	0	0	0	0	0	0	0	0	0	0	0
		27 to 45 Degrees	1	65	65	65	65	60	55	47	40	35	31	27	24
			2	47	42	39	35	32	29	25	22	19	16	14	13
			3	37	33	30	27	25	23	19	17	14	13	11	10

Note: See SML "Roof Area" conversion chart and associated ASCE 7-16 Roof Zones on pages 4-10.

Hip Roof RT13

RT-[E] Mount Mini Plywood Only Installations (60 Cell PV Panels) Maximum Mount Spacing in Inches

Portrait Orientation - ASCE 7-16

Snow Load	Exposure Category	Roof Angle	Roof Area	Basic Wind Speed, V (mph) 95	100	105	110	115	120	130	140	150	160	170	180
0 PSF	B	7 to 20 Degrees	1	65	58	52	47	42	39	32	28	24	21	18	16
			2	47	42	38	34	31	28	24	20	17	15	13	12
			3	43	38	35	31	28	26	22	19	16	14	12	11
		20 to 27 Degrees	1	85	75	67	61	55	50	42	36	31	27	23	21
			2	57	50	45	41	37	34	28	24	21	18	16	14
			3	0	0	0	0	0	0	0	0	0	0	0	0
		27 to 45 Degrees	1	72	65	58	53	48	44	37	32	28	24	21	19
			2	37	34	30	28	25	23	19	17	14	13	11	10
			3	29	26	23	21	19	18	15	13	11	10	8	8
	C	7 to 20 Degrees	1	45	40	36	32	29	27	22	19	17	14	13	11
			2	32	29	26	24	21	20	16	14	12	11	9	8
			3	30	27	24	22	20	18	15	13	11	10	8	8
		20 to 27 Degrees	1	58	51	46	42	38	35	29	25	21	19	16	15
			2	39	35	31	28	26	24	20	17	15	13	11	10
			3	0	0	0	0	0	0	0	0	0	0	0	0
		27 to 45 Degrees	1	50	45	41	37	34	31	26	22	19	17	15	13
			2	26	24	21	19	18	16	14	12	10	9	8	7
			3	20	18	16	15	14	12	10	9	8	7	6	5
	D	7 to 20 Degrees	1	37	33	30	27	24	22	19	16	14	12	11	9
			2	27	24	22	20	18	16	14	12	10	9	8	7
			3	25	22	20	18	16	15	13	11	9	8	7	6
		20 to 27 Degrees	1	48	43	38	35	32	29	24	21	18	16	14	12
			2	32	29	26	24	22	20	17	14	12	11	9	8
			3	0	0	0	0	0	0	0	0	0	0	0	0
		27 to 45 Degrees	1	42	38	34	31	28	26	22	19	16	14	13	11
			2	22	20	18	16	15	14	11	10	8	7	6	6
			3	17	15	14	12	11	10	9	7	6	6	5	4
1-10 PSF	B	7 to 20 Degrees	1	65	58	52	47	42	39	32	28	24	21	18	16
			2	47	42	38	34	31	28	24	20	17	15	13	12
			3	43	38	35	31	28	26	22	19	16	14	12	11
		20 to 27 Degrees	1	85	75	67	61	55	50	42	36	31	27	23	21
			2	57	50	45	41	37	34	28	24	21	18	16	14
			3	0	0	0	0	0	0	0	0	0	0	0	0
		27 to 45 Degrees	1	72	65	58	53	48	44	37	32	28	24	21	19
			2	37	34	30	28	25	23	19	17	14	13	11	10
			3	29	26	23	21	19	18	15	13	11	10	8	8
	C	7 to 20 Degrees	1	45	40	36	32	29	27	22	19	17	14	13	11
			2	32	29	26	24	21	20	16	14	12	11	9	8
			3	30	27	24	22	20	18	15	13	11	10	8	8
		20 to 27 Degrees	1	58	51	46	42	38	35	29	25	21	19	16	15
			2	39	35	31	28	26	24	20	17	15	13	11	10
			3	0	0	0	0	0	0	0	0	0	0	0	0
		27 to 45 Degrees	1	50	45	41	37	34	31	26	22	19	17	15	13
			2	26	24	21	19	18	16	14	12	10	9	8	7
			3	20	18	16	15	14	12	10	9	8	7	6	5
	D	7 to 20 Degrees	1	37	33	30	27	24	22	19	16	14	12	11	9
			2	27	24	22	20	18	16	14	12	10	9	8	7
			3	25	22	20	18	16	15	13	11	9	8	7	6
		20 to 27 Degrees	1	48	43	38	35	32	29	24	21	18	16	14	12
			2	32	29	26	24	22	20	17	14	12	11	9	8
			3	0	0	0	0	0	0	0	0	0	0	0	0
		27 to 45 Degrees	1	42	38	34	31	28	26	22	19	16	14	13	11
			2	22	20	18	16	15	14	11	10	8	7	6	6
			3	17	15	14	12	11	10	9	7	6	6	5	4
11-20 PSF	B	7 to 20 Degrees	1	65	58	52	47	42	39	32	28	24	21	18	16
			2	47	42	38	34	31	28	24	20	17	15	13	12
			3	43	38	35	31	28	26	22	19	16	14	12	11
		20 to 27 Degrees	1	68	68	67	61	55	50	42	36	31	27	23	21
			2	57	50	45	41	37	34	28	24	21	18	16	14
			3	0	0	0	0	0	0	0	0	0	0	0	0
		27 to 45 Degrees	1	72	65	58	53	48	44	37	32	28	24	21	19
			2	37	34	30	28	25	23	19	17	14	13	11	10
			3	29	26	23	21	19	18	15	13	11	10	8	8
	C	7 to 20 Degrees	1	45	40	36	32	29	27	22	19	17	14	13	11
			2	32	29	26	24	21	20	16	14	12	11	9	8
			3	30	27	24	22	20	18	15	13	11	10	8	8
		20 to 27 Degrees	1	58	51	46	42	38	35	29	25	21	19	16	15
			2	39	35	31	28	26	24	20	17	15	13	11	10
			3	0	0	0	0	0	0	0	0	0	0	0	0
		27 to 45 Degrees	1	50	45	41	37	34	31	26	22	19	17	15	13
			2	26	24	21	19	18	16	14	12	10	9	8	7
			3	20	18	16	15	14	12	10	9	8	7	6	5
	D	7 to 20 Degrees	1	37	33	30	27	24	22	19	16	14	12	11	9
			2	27	24	22	20	18	16	14	12	10	9	8	7
			3	25	22	20	18	16	15	13	11	9	8	7	6
		20 to 27 Degrees	1	48	43	38	35	32	29	24	21	18	16	14	12
			2	32	29	26	24	22	20	17	14	12	11	9	8
			3	0	0	0	0	0	0	0	0	0	0	0	0
		27 to 45 Degrees	1	42	38	34	31	28	26	22	19	16	14	13	11
			2	22	20	18	16	15	14	11	10	8	7	6	6
			3	17	15	14	12	11	10	9	7	6	6	5	4

Note: See SML "Roof Area" conversion chart and associated ASCE 7-16 Roof Zones on pages 4-10.

Hip Roof RT13

RT-[E] Mount Mini Plywood Only Installations (60 Cell PV Panels) Maximum Mount Spacing in Inches

Portrait Orientation - ASCE 7-16

Snow Load	Exposure Category	Roof Angle	Roof Area	Basic Wind Speed, V (mph) 95	100	105	110	115	120	130	140	150	160	170	180
21-30 PSF	B	7 to 20 Degrees	1	56	56	52	47	42	39	32	28	24	21	18	16
			2	47	42	38	34	31	28	24	20	17	15	13	12
			3	43	38	35	31	28	26	22	19	16	14	12	11
		20 to 27 Degrees	1	57	57	57	57	55	50	42	36	31	27	23	21
			2	57	50	45	41	37	34	28	24	21	18	16	14
			3	0	0	0	0	0	0	0	0	0	0	0	0
		27 to 45 Degrees	1	66	65	58	53	48	44	37	32	28	24	21	19
			2	37	34	30	28	25	23	19	17	14	13	11	10
			3	29	26	23	21	19	18	15	13	11	10	8	8
	C	7 to 20 Degrees	1	45	40	36	32	29	27	22	19	17	14	13	11
			2	32	29	26	24	21	20	16	14	12	11	9	8
			3	30	27	24	22	20	18	15	13	11	10	8	8
		20 to 27 Degrees	1	57	51	46	42	38	35	29	25	21	19	16	15
			2	39	35	31	28	26	24	20	17	15	13	11	10
			3	0	0	0	0	0	0	0	0	0	0	0	0
		27 to 45 Degrees	1	50	45	41	37	34	31	26	22	19	17	15	13
			2	26	24	21	19	18	16	14	12	10	9	8	7
			3	20	18	16	15	14	12	10	9	8	7	6	5
	D	7 to 20 Degrees	1	37	33	30	27	24	22	19	16	14	12	11	9
			2	27	24	22	20	18	16	14	12	10	9	8	7
			3	25	22	20	18	16	15	13	11	9	8	7	6
		20 to 27 Degrees	1	48	43	38	35	32	29	24	21	18	16	14	12
			2	32	29	26	24	22	20	17	14	12	11	9	8
			3	0	0	0	0	0	0	0	0	0	0	0	0
		27 to 45 Degrees	1	42	38	34	31	28	26	22	19	16	14	13	11
			2	22	20	18	16	15	14	11	10	8	7	6	6
			3	17	15	14	12	11	10	9	7	6	6	5	4
31-40 PSF	B	7 to 20 Degrees	1	43	43	43	43	42	39	32	28	24	21	18	16
			2	43	42	38	34	31	28	24	20	17	15	13	12
			3	43	38	35	31	28	26	22	19	16	14	12	11
		20 to 27 Degrees	1	45	45	45	45	45	45	42	36	31	27	23	21
			2	45	45	45	41	37	34	28	24	21	18	16	14
			3	0	0	0	0	0	0	0	0	0	0	0	0
		27 to 45 Degrees	1	53	53	53	53	48	44	37	32	28	24	21	19
			2	37	34	30	28	25	23	19	17	14	13	11	10
			3	29	26	23	21	19	18	15	13	11	10	8	8
	C	7 to 20 Degrees	1	43	40	36	32	29	27	22	19	17	14	13	11
			2	32	29	26	24	21	20	16	14	12	11	9	8
			3	30	27	24	22	20	18	15	13	11	10	8	8
		20 to 27 Degrees	1	45	45	45	42	38	35	29	25	21	19	16	15
			2	39	35	31	28	26	24	20	17	15	13	11	10
			3	0	0	0	0	0	0	0	0	0	0	0	0
		27 to 45 Degrees	1	50	45	41	37	34	31	26	22	19	17	15	13
			2	26	24	21	19	18	16	14	12	10	9	8	7
			3	20	18	16	15	14	12	10	9	8	7	6	5
	D	7 to 20 Degrees	1	37	33	30	27	24	22	19	16	14	12	11	9
			2	27	24	22	20	18	16	14	12	10	9	8	7
			3	25	22	20	18	16	15	13	11	9	8	7	6
		20 to 27 Degrees	1	45	43	38	35	32	29	24	21	18	16	14	12
			2	32	29	26	24	22	20	17	14	12	11	9	8
			3	0	0	0	0	0	0	0	0	0	0	0	0
		27 to 45 Degrees	1	42	38	34	31	28	26	22	19	16	14	13	11
			2	22	20	18	16	15	14	11	10	8	7	6	6
			3	17	15	14	12	11	10	9	7	6	6	5	4
41-50 PSF	B	7 to 20 Degrees	1	35	35	35	35	35	35	32	28	24	21	18	16
			2	35	35	35	34	31	28	24	20	17	15	13	12
			3	35	35	35	31	28	26	22	19	16	14	12	11
		20 to 27 Degrees	1	37	37	37	37	37	37	37	36	31	27	23	21
			2	37	37	37	37	37	34	28	24	21	18	16	14
			3	0	0	0	0	0	0	0	0	0	0	0	0
		27 to 45 Degrees	1	44	44	44	44	44	44	37	32	28	24	21	19
			2	37	34	30	28	25	23	19	17	14	13	11	10
			3	29	26	23	21	19	18	15	13	11	10	8	8
	C	7 to 20 Degrees	1	35	35	35	32	29	27	22	19	17	14	13	11
			2	32	29	26	24	21	20	16	14	12	11	9	8
			3	30	27	24	22	20	18	15	13	11	10	8	8
		20 to 27 Degrees	1	37	37	37	37	37	35	29	25	21	19	16	15
			2	37	35	31	28	26	24	20	17	15	13	11	10
			3	0	0	0	0	0	0	0	0	0	0	0	0
		27 to 45 Degrees	1	44	44	41	37	34	31	26	22	19	17	15	13
			2	26	24	21	19	18	16	14	12	10	9	8	7
			3	20	18	16	15	14	12	10	9	8	7	6	5
	D	7 to 20 Degrees	1	35	33	30	27	24	22	19	16	14	12	11	9
			2	27	24	22	20	18	16	14	12	10	9	8	7
			3	25	22	20	18	16	15	13	11	9	8	7	6
		20 to 27 Degrees	1	37	37	37	35	32	29	24	21	18	16	14	12
			2	32	29	26	24	22	20	17	14	12	11	9	8
			3	0	0	0	0	0	0	0	0	0	0	0	0
		27 to 45 Degrees	1	42	38	34	31	28	26	22	19	16	14	13	11
			2	22	20	18	16	15	14	11	10	8	7	6	6
			3	17	15	14	12	11	10	9	7	6	6	5	4

Note: See SML "Roof Area" conversion chart and associated ASCE 7-16 Roof Zones on pages 4-10.

Hip Roof RT13	RT-[E] Mount Mini Plywood Only Installations (60 Cell PV Panels) Maximum Mount Spacing in Inches														
	Portrait Orientation - ASCE 7-16														
Snow Load	Exposure Category	Roof Angle	Roof Area	Basic Wind Speed, V (mph)											
				95	100	105	110	115	120	130	140	150	160	170	180
51-60 PSF	B	7 to 20 Degrees	1	30	30	30	30	30	30	30	28	24	21	18	16
			2	30	30	30	30	30	28	24	20	17	15	13	12
			3	30	30	30	30	28	26	22	19	16	14	12	11
		20 to 27 Degrees	1	31	31	31	31	31	31	31	31	31	27	23	21
			2	31	31	31	31	31	31	28	24	21	18	16	14
			3	0	0	0	0	0	0	0	0	0	0	0	0
		27 to 45 Degrees	1	38	38	38	38	38	38	37	32	28	24	21	19
			2	37	34	30	28	25	23	19	17	14	13	11	10
			3	29	26	23	21	19	18	15	13	11	10	8	8
	C	7 to 20 Degrees	1	30	30	30	30	29	27	22	19	17	14	13	11
			2	30	29	26	24	21	20	16	14	12	11	9	8
			3	30	27	24	22	20	18	15	13	11	10	8	8
		20 to 27 Degrees	1	31	31	31	31	31	31	29	25	21	19	16	15
			2	31	31	31	28	26	24	20	17	15	13	11	10
			3	0	0	0	0	0	0	0	0	0	0	0	0
		27 to 45 Degrees	1	38	38	38	37	34	31	26	22	19	17	15	13
			2	26	24	21	19	18	16	14	12	10	9	8	7
			3	20	18	16	15	14	12	10	9	8	7	6	5
	D	7 to 20 Degrees	1	30	30	30	27	29	22	19	16	14	12	11	9
			2	27	24	22	20	18	16	14	12	10	9	8	7
			3	25	22	20	18	16	15	13	11	9	8	7	6
		20 to 27 Degrees	1	31	31	31	31	31	29	24	21	18	16	14	12
			2	31	29	26	24	22	20	17	14	12	11	9	8
			3	0	0	0	0	0	0	0	0	0	0	0	0
		27 to 45 Degrees	1	38	38	34	31	28	26	22	19	16	14	13	11
			2	22	20	18	16	15	14	11	10	8	7	6	6
			3	17	15	14	12	11	10	9	7	6	6	5	4
61-70 PSF	B	7 to 20 Degrees	1	26	26	26	26	26	26	26	26	24	21	18	16
			2	26	26	26	26	26	26	24	20	17	15	13	12
			3	26	26	26	26	26	26	22	19	16	14	12	11
		20 to 27 Degrees	1	27	27	27	27	27	27	27	27	27	27	23	21
			2	27	27	27	27	27	27	27	24	21	18	16	14
			3	0	0	0	0	0	0	0	0	0	0	0	0
		27 to 45 Degrees	1	33	33	33	33	33	33	33	32	28	24	21	19
			2	33	33	30	28	25	23	19	17	14	13	11	10
			3	29	26	23	21	19	18	15	13	11	10	8	8
	C	7 to 20 Degrees	1	26	26	26	26	26	26	22	19	17	14	13	11
			2	26	26	26	24	21	20	16	14	12	11	9	8
			3	26	26	24	22	20	18	15	13	11	10	8	8
		20 to 27 Degrees	1	27	27	27	27	27	27	27	25	21	19	16	15
			2	27	27	27	27	26	24	20	17	15	13	11	10
			3	0	0	0	0	0	0	0	0	0	0	0	0
		27 to 45 Degrees	1	33	33	33	33	33	31	26	22	19	17	15	13
			2	26	24	21	19	18	16	14	12	10	9	8	7
			3	20	18	16	15	14	12	10	9	8	7	6	5
	D	7 to 20 Degrees	1	26	26	26	26	24	22	19	16	14	12	11	9
			2	26	24	22	20	18	16	14	12	10	9	8	7
			3	25	22	20	18	16	15	13	11	9	8	7	6
		20 to 27 Degrees	1	27	27	27	27	27	27	24	21	18	16	14	12
			2	27	27	26	24	22	20	17	14	12	11	9	8
			3	0	0	0	0	0	0	0	0	0	0	0	0
		27 to 45 Degrees	1	33	33	33	31	28	26	22	19	16	14	13	11
			2	22	20	18	16	15	14	11	10	8	7	6	6
			3	17	15	14	12	11	10	9	7	6	6	5	4

Note: See SML "Roof Area" conversion chart and associated ASCE 7-16 Roof Zones on pages 4-10.

Hip Roof RT14

RT-[E] Mount Mini Plywood Only Installations
(72 Cell PV Panels)
Maximum Mount Spacing in Inches

Portrait Orientation - ASCE 7-16

Snow Load	Exposure Category	Roof Angle	Roof Area	Basic Wind Speed, V (mph) 95	100	105	110	115	120	130	140	150	160	170	180
0 PSF	B	7 to 20 Degrees	1	57	51	46	41	37	34	28	24	21	18	16	14
			2	41	37	33	30	27	25	21	18	15	13	12	10
			3	38	34	30	27	25	23	19	16	14	12	11	9
		20 to 27 Degrees	1	74	66	59	53	48	44	37	31	27	23	21	18
			2	50	44	40	36	32	30	25	21	18	16	14	12
			3	0	0	0	0	0	0	0	0	0	0	0	0
		27 to 45 Degrees	1	63	57	51	46	42	39	33	28	24	21	19	17
			2	33	29	27	24	22	20	17	15	13	11	10	9
			3	25	23	20	19	17	15	13	11	10	8	7	7
	C	7 to 20 Degrees	1	39	35	31	28	26	23	20	17	14	13	11	10
			2	28	25	23	21	19	17	14	12	11	9	8	7
			3	26	23	21	19	17	16	13	11	10	8	7	7
		20 to 27 Degrees	1	51	45	40	37	33	30	25	22	19	16	14	13
			2	34	31	27	25	23	21	17	15	13	11	10	9
			3	0	0	0	0	0	0	0	0	0	0	0	0
		27 to 45 Degrees	1	44	40	36	32	30	27	23	20	17	15	13	12
			2	23	21	19	17	15	14	12	10	9	8	7	6
			3	18	16	14	13	12	11	9	8	7	6	5	5
	D	7 to 20 Degrees	1	32	29	26	23	21	19	16	14	12	10	9	8
			2	24	21	19	17	16	14	12	10	9	8	7	6
			3	22	19	17	16	14	13	11	9	8	7	6	5
		20 to 27 Degrees	1	42	37	34	30	28	25	21	18	16	14	12	11
			2	28	25	23	21	19	17	15	12	11	9	8	7
			3	0	0	0	0	0	0	0	0	0	0	0	0
		27 to 45 Degrees	1	37	33	30	27	25	23	19	16	14	12	11	10
			2	19	17	16	14	13	12	10	9	7	6	6	5
			3	15	13	12	11	10	9	8	7	6	5	4	4
1-10 PSF	B	7 to 20 Degrees	1	57	51	46	41	37	34	28	24	21	18	16	14
			2	41	37	33	30	27	25	21	18	15	13	12	10
			3	38	34	30	27	25	23	19	16	14	12	11	9
		20 to 27 Degrees	1	74	66	59	53	48	44	37	31	27	23	21	18
			2	50	44	40	36	32	30	25	21	18	16	14	12
			3	0	0	0	0	0	0	0	0	0	0	0	0
		27 to 45 Degrees	1	63	57	51	46	42	39	33	28	24	21	19	17
			2	33	29	27	24	22	20	17	15	13	11	10	9
			3	25	23	20	19	17	15	13	11	10	8	7	7
	C	7 to 20 Degrees	1	39	35	31	28	26	23	20	17	14	13	11	10
			2	28	25	23	21	19	17	14	12	11	9	8	7
			3	26	23	21	19	17	16	13	11	10	8	7	7
		20 to 27 Degrees	1	51	45	40	37	33	30	25	22	19	16	14	13
			2	34	31	27	25	23	21	17	15	13	11	10	9
			3	0	0	0	0	0	0	0	0	0	0	0	0
		27 to 45 Degrees	1	44	40	36	32	30	27	23	20	17	15	13	12
			2	23	21	19	17	15	14	12	10	9	8	7	6
			3	18	16	14	13	12	11	9	8	7	6	5	5
	D	7 to 20 Degrees	1	32	29	26	23	21	19	16	14	12	10	9	8
			2	24	21	19	17	16	14	12	10	9	8	7	6
			3	22	19	17	16	14	13	11	9	8	7	6	5
		20 to 27 Degrees	1	42	37	34	30	28	25	21	18	16	14	12	11
			2	28	25	23	21	19	17	15	12	11	9	8	7
			3	0	0	0	0	0	0	0	0	0	0	0	0
		27 to 45 Degrees	1	37	33	30	27	25	23	19	16	14	12	11	10
			2	19	17	16	14	13	12	10	9	7	6	6	5
			3	15	13	12	11	10	9	8	7	6	5	4	4
11-20 PSF	B	7 to 20 Degrees	1	57	51	46	41	37	34	28	24	21	18	16	14
			2	41	37	33	30	27	25	21	18	15	13	12	10
			3	38	34	30	27	25	23	19	16	14	12	11	9
		20 to 27 Degrees	1	60	60	59	53	48	44	37	31	27	23	21	18
			2	50	44	40	36	32	30	25	21	18	16	14	12
			3	0	0	0	0	0	0	0	0	0	0	0	0
		27 to 45 Degrees	1	63	57	51	46	42	39	33	28	24	21	19	17
			2	33	29	27	24	22	20	17	15	13	11	10	9
			3	25	23	20	19	17	15	13	11	10	8	7	7
	C	7 to 20 Degrees	1	39	35	31	28	26	23	20	17	14	13	11	10
			2	28	25	23	21	19	17	14	12	11	9	8	7
			3	26	23	21	19	17	16	13	11	10	8	7	7
		20 to 27 Degrees	1	51	45	40	37	33	30	25	22	19	16	14	13
			2	34	31	27	25	23	21	17	15	13	11	10	9
			3	0	0	0	0	0	0	0	0	0	0	0	0
		27 to 45 Degrees	1	44	40	36	32	30	27	23	20	17	15	13	12
			2	23	21	19	17	15	14	12	10	9	8	7	6
			3	18	16	14	13	12	11	9	8	7	6	5	5
	D	7 to 20 Degrees	1	32	29	26	23	21	19	16	14	12	10	9	8
			2	24	21	19	17	16	14	12	10	9	8	7	6
			3	22	19	17	16	14	13	11	9	8	7	6	5
		20 to 27 Degrees	1	42	37	34	30	28	25	21	18	16	14	12	11
			2	28	25	23	21	19	17	15	12	11	9	8	7
			3	0	0	0	0	0	0	0	0	0	0	0	0
		27 to 45 Degrees	1	37	33	30	27	25	23	19	16	14	12	11	10
			2	19	17	16	14	13	12	10	9	7	6	6	5
			3	15	13	12	11	10	9	8	7	6	5	4	4

Note: See SML "Roof Area" conversion chart and associated ASCE 7-16 Roof Zones on pages 4-10.

Hip Roof RT14

RT-[E] Mount Mini Plywood Only Installations
(72 Cell PV Panels)
Maximum Mount Spacing in Inches

Portrait Orientation - ASCE 7-16

Snow Load	Exposure Category	Roof Angle	Roof Area	Basic Wind Speed, V (mph) 95	100	105	110	115	120	130	140	150	160	170	180
21-30 PSF	B	7 to 20 Degrees	1	49	49	46	41	37	34	28	24	21	18	16	14
			2	41	37	33	30	27	25	21	18	15	13	12	10
			3	38	34	30	27	25	23	19	16	14	12	11	9
		20 to 27 Degrees	1	50	50	50	50	48	44	37	31	27	23	21	18
			2	50	44	40	36	32	30	25	21	18	16	14	12
			3	0	0	0	0	0	0	0	0	0	0	0	0
		27 to 45 Degrees	1	58	57	51	46	42	39	33	28	24	21	19	17
			2	33	29	27	24	22	20	17	15	13	11	10	9
			3	25	23	20	19	17	15	13	11	10	8	7	7
	C	7 to 20 Degrees	1	39	35	31	28	26	23	20	17	14	13	11	10
			2	28	25	23	21	19	17	14	12	11	9	8	7
			3	26	23	21	19	17	16	13	11	10	8	7	7
		20 to 27 Degrees	1	50	45	40	37	33	30	25	22	19	16	14	13
			2	34	31	27	25	23	21	17	15	13	11	10	9
			3	0	0	0	0	0	0	0	0	0	0	0	0
		27 to 45 Degrees	1	44	40	36	32	30	27	23	20	17	15	13	12
			2	23	21	19	17	15	14	12	10	9	8	7	6
			3	18	16	14	13	12	11	9	8	7	6	5	5
	D	7 to 20 Degrees	1	32	29	26	23	21	19	16	14	12	10	9	8
			2	24	21	19	17	16	14	12	10	9	8	7	6
			3	22	19	17	16	14	13	11	9	8	7	6	5
		20 to 27 Degrees	1	42	37	34	30	28	25	21	18	16	14	12	11
			2	28	25	23	21	19	17	15	12	11	9	8	7
			3	0	0	0	0	0	0	0	0	0	0	0	0
		27 to 45 Degrees	1	37	33	30	27	25	23	19	16	14	12	11	10
			2	19	17	16	14	13	12	10	9	7	6	6	5
			3	15	13	12	11	10	9	8	7	6	5	4	4
31-40 PSF	B	7 to 20 Degrees	1	38	38	38	38	37	34	28	24	21	18	16	14
			2	38	37	33	30	27	25	21	18	15	13	12	10
			3	38	34	30	27	25	23	19	16	14	12	11	9
		20 to 27 Degrees	1	39	39	39	39	39	39	37	31	27	23	21	18
			2	39	39	39	36	32	30	25	21	18	16	14	12
			3	0	0	0	0	0	0	0	0	0	0	0	0
		27 to 45 Degrees	1	47	47	47	46	42	39	33	28	24	21	19	17
			2	33	29	27	24	22	20	17	15	13	11	10	9
			3	25	23	20	19	17	15	13	11	10	8	7	7
	C	7 to 20 Degrees	1	38	35	31	28	26	23	20	17	14	13	11	10
			2	28	25	23	21	19	17	14	12	11	9	8	7
			3	26	23	21	19	17	16	13	11	10	8	7	7
		20 to 27 Degrees	1	39	39	39	37	33	30	25	22	19	16	14	13
			2	34	31	27	25	23	21	17	15	13	11	10	9
			3	0	0	0	0	0	0	0	0	0	0	0	0
		27 to 45 Degrees	1	44	40	36	32	30	27	23	20	17	15	13	12
			2	23	21	19	17	15	14	12	10	9	8	7	6
			3	18	16	14	13	12	11	9	8	7	6	5	5
	D	7 to 20 Degrees	1	32	29	26	23	21	19	16	14	12	10	9	8
			2	24	21	19	17	16	14	12	10	9	8	7	6
			3	22	19	17	16	14	13	11	9	8	7	6	5
		20 to 27 Degrees	1	39	37	34	30	28	25	21	18	16	14	12	11
			2	28	25	23	21	19	17	15	12	11	9	8	7
			3	0	0	0	0	0	0	0	0	0	0	0	0
		27 to 45 Degrees	1	37	33	30	27	25	23	19	16	14	12	11	10
			2	19	17	16	14	13	12	10	9	7	6	6	5
			3	15	13	12	11	10	9	8	7	6	5	4	4
41-50 PSF	B	7 to 20 Degrees	1	31	31	31	31	31	31	28	24	21	18	16	14
			2	31	31	31	30	27	25	21	18	15	13	12	10
			3	31	31	30	27	25	23	19	16	14	12	11	9
		20 to 27 Degrees	1	32	32	32	32	32	32	32	31	27	23	21	18
			2	32	32	32	32	32	30	25	21	18	16	14	12
			3	0	0	0	0	0	0	0	0	0	0	0	0
		27 to 45 Degrees	1	39	39	39	39	39	39	33	28	24	21	19	17
			2	33	29	27	24	22	20	17	15	13	11	10	9
			3	25	23	20	19	17	15	13	11	10	8	7	7
	C	7 to 20 Degrees	1	31	31	31	28	26	23	20	17	14	13	11	10
			2	28	25	23	21	19	17	14	12	11	9	8	7
			3	26	23	21	19	17	16	13	11	10	8	7	7
		20 to 27 Degrees	1	32	32	32	32	32	30	25	22	19	16	14	13
			2	32	31	27	25	23	21	17	15	13	11	10	9
			3	0	0	0	0	0	0	0	0	0	0	0	0
		27 to 45 Degrees	1	39	39	36	32	30	27	23	20	17	15	13	12
			2	23	21	19	17	15	14	12	10	9	8	7	6
			3	18	16	14	13	12	11	9	8	7	6	5	5
	D	7 to 20 Degrees	1	31	29	26	23	21	19	16	14	12	10	9	8
			2	24	21	19	17	16	14	12	10	9	8	7	6
			3	22	19	17	16	14	13	11	9	8	7	6	5
		20 to 27 Degrees	1	32	32	32	30	28	25	21	18	16	14	12	11
			2	28	25	23	21	19	17	15	12	11	9	8	7
			3	0	0	0	0	0	0	0	0	0	0	0	0
		27 to 45 Degrees	1	37	33	30	27	25	23	19	16	14	12	11	10
			2	19	17	16	14	13	12	10	9	7	6	6	5
			3	15	13	12	11	10	9	8	7	6	5	4	4

Note: See SML "Roof Area" conversion chart and associated ASCE 7-16 Roof Zones on pages 4-10.

Hip Roof RT14	RT-[E] Mount Mini Plywood Only Installations (72 Cell PV Panels) Maximum Mount Spacing in Inches													
	Portrait Orientation - ASCE 7-16													
Snow Load	Exposure Category	Roof Angle	Roof Area	Basic Wind Speed, V (mph) 95	100	105	110	115	120	130	140	150	160	170	180
51-60 PSF	B	7 to 20 Degrees	1	26	26	26	26	26	26	26	24	21	18	16	14
			2	26	26	26	26	26	25	21	18	15	13	12	10
			3	26	26	26	26	25	23	19	16	14	12	11	9
		20 to 27 Degrees	1	27	27	27	27	27	27	27	27	27	23	21	18
			2	27	27	27	27	27	27	25	21	18	16	14	12
			3	0	0	0	0	0	0	0	0	0	0	0	0
		27 to 45 Degrees	1	33	33	33	33	33	33	33	28	24	21	19	17
			2	33	29	27	24	22	20	17	15	13	11	10	9
			3	25	23	20	19	17	15	13	11	10	8	7	7
	C	7 to 20 Degrees	1	26	26	26	26	26	23	20	17	14	13	11	10
			2	26	25	23	21	19	17	14	12	11	9	8	7
			3	26	23	21	19	17	16	13	11	10	8	7	7
		20 to 27 Degrees	1	27	27	27	27	27	27	25	22	19	16	14	13
			2	27	27	27	25	23	21	17	15	13	11	10	9
			3	0	0	0	0	0	0	0	0	0	0	0	0
		27 to 45 Degrees	1	33	33	33	32	30	27	23	20	17	15	13	12
			2	23	21	19	17	15	14	12	10	9	8	7	6
			3	18	16	14	13	12	11	9	8	7	6	5	5
	D	7 to 20 Degrees	1	26	26	26	23	26	19	16	14	12	10	9	8
			2	24	21	19	17	16	14	12	10	9	8	7	6
			3	22	19	17	16	14	13	11	9	8	7	6	5
		20 to 27 Degrees	1	27	27	27	27	27	25	21	18	16	14	12	11
			2	27	25	23	21	19	17	15	12	11	9	8	7
			3	0	0	0	0	0	0	0	0	0	0	0	0
		27 to 45 Degrees	1	33	33	30	27	25	23	19	16	14	12	11	10
			2	19	17	16	14	13	12	10	9	7	6	6	5
			3	15	13	12	11	10	9	8	7	6	5	4	4
61-70 PSF	B	7 to 20 Degrees	1	23	23	23	23	23	23	23	23	21	18	16	14
			2	23	23	23	23	23	23	21	18	15	13	12	10
			3	23	23	23	23	23	23	19	16	14	12	11	9
		20 to 27 Degrees	1	24	24	24	24	24	24	24	24	24	23	21	18
			2	24	24	24	24	24	24	24	21	18	16	14	12
			3	0	0	0	0	0	0	0	0	0	0	0	0
		27 to 45 Degrees	1	29	29	29	29	29	29	29	28	24	21	19	17
			2	29	29	27	24	22	20	17	15	13	11	10	9
			3	25	23	20	19	17	15	13	11	10	8	7	7
	C	7 to 20 Degrees	1	23	23	23	23	23	23	20	17	14	13	11	10
			2	23	23	23	21	19	17	14	12	11	9	8	7
			3	23	23	21	19	17	16	13	11	10	8	7	7
		20 to 27 Degrees	1	24	24	24	24	24	24	24	22	19	16	14	13
			2	24	24	24	24	23	21	17	15	13	11	10	9
			3	0	0	0	0	0	0	0	0	0	0	0	0
		27 to 45 Degrees	1	29	29	29	29	29	27	23	20	17	15	13	12
			2	23	21	19	17	15	14	12	10	9	8	7	6
			3	18	16	14	13	12	11	9	8	7	6	5	5
	D	7 to 20 Degrees	1	23	23	23	23	21	19	16	14	12	10	9	8
			2	23	21	19	17	16	14	12	10	9	8	7	6
			3	22	19	17	16	14	13	11	9	8	7	6	5
		20 to 27 Degrees	1	24	24	24	24	24	24	21	18	16	14	12	11
			2	24	24	23	21	19	17	15	12	11	9	8	7
			3	0	0	0	0	0	0	0	0	0	0	0	0
		27 to 45 Degrees	1	29	29	29	27	25	23	19	16	14	12	11	10
			2	19	17	16	14	13	12	10	9	7	6	6	5
			3	15	13	12	11	10	9	8	7	6	5	4	4

Note: See SML "Roof Area" conversion chart and associated ASCE 7-16 Roof Zones on pages 4-10.

Hip Roof RT15	RT-[E] Mount Mini OSB Only Installations (60 Cell PV Panels) Maximum Mount Spacing in Inches													
Portrait Orientation - ASCE 7-16														
Snow Load	Exposure Category	Roof Angle	Roof Area	Basic Wind Speed, V (mph) 95	100	105	110	115	120	130	140	150	160	170	180
0 PSF	B	7 to 20 Degrees	1	55	49	44	39	36	32	27	23	20	17	15	13
			2	40	35	32	29	26	24	20	17	15	13	11	10
			3	36	32	29	26	24	22	18	16	13	12	10	9
		20 to 27 Degrees	1	70	63	56	51	46	42	35	30	26	22	20	17
			2	47	42	38	34	31	28	24	20	18	15	14	12
			3	0	0	0	0	0	0	0	0	0	0	0	0
		27 to 45 Degrees	1	60	54	48	44	40	37	31	27	23	20	18	16
			2	31	28	25	23	21	19	16	14	12	11	9	8
			3	24	22	20	18	16	15	13	11	9	8	7	6
	C	7 to 20 Degrees	1	37	33	30	27	25	22	19	16	14	12	11	9
			2	27	24	22	20	18	16	14	12	10	9	8	7
			3	25	22	20	18	17	15	13	11	9	8	7	6
		20 to 27 Degrees	1	48	43	39	35	32	29	24	21	18	16	14	12
			2	33	29	26	24	22	20	17	14	12	11	9	8
			3	0	0	0	0	0	0	0	0	0	0	0	0
		27 to 45 Degrees	1	42	38	34	31	28	26	22	19	16	14	13	11
			2	22	20	18	16	15	14	11	10	8	7	6	6
			3	17	15	14	12	11	10	9	7	6	6	5	4
	D	7 to 20 Degrees	1	31	28	25	23	21	19	16	13	12	10	9	8
			2	23	20	18	17	15	14	12	10	8	7	6	6
			3	21	19	17	15	14	13	11	9	8	7	6	5
		20 to 27 Degrees	1	40	36	32	29	27	24	20	17	15	13	12	10
			2	27	24	22	20	18	17	14	12	10	9	8	7
			3	0	0	0	0	0	0	0	0	0	0	0	0
		27 to 45 Degrees	1	35	32	29	26	24	22	18	16	14	12	11	9
			2	18	17	15	14	12	11	10	8	7	6	5	5
			3	14	13	12	10	10	9	7	6	5	5	4	4
1-10 PSF	B	7 to 20 Degrees	1	49	49	44	39	36	32	27	23	20	17	15	13
			2	40	35	32	29	26	24	20	17	15	13	11	10
			3	36	32	29	26	24	22	18	16	13	12	10	9
		20 to 27 Degrees	1	50	50	50	50	46	42	35	30	26	22	20	17
			2	47	42	38	34	31	28	24	20	18	15	14	12
			3	0	0	0	0	0	0	0	0	0	0	0	0
		27 to 45 Degrees	1	54	54	48	44	40	37	31	27	23	20	18	16
			2	31	28	25	23	21	19	16	14	12	11	9	8
			3	24	22	20	18	16	15	13	11	9	8	7	6
	C	7 to 20 Degrees	1	37	33	30	27	25	22	19	16	14	12	11	9
			2	27	24	22	20	18	16	14	12	10	9	8	7
			3	25	22	20	18	17	15	13	11	9	8	7	6
		20 to 27 Degrees	1	48	43	39	35	32	29	35	21	18	16	14	12
			2	33	29	26	24	22	20	24	14	12	11	9	8
			3	0	0	0	0	0	0	0	0	0	0	0	0
		27 to 45 Degrees	1	42	38	34	31	28	26	22	19	16	14	13	11
			2	22	20	18	16	15	14	11	10	8	7	6	6
			3	17	15	14	12	11	10	9	7	6	6	5	4
	D	7 to 20 Degrees	1	31	28	25	23	21	19	16	13	12	10	9	8
			2	23	20	18	17	15	14	12	10	8	7	6	6
			3	21	19	17	15	14	13	11	9	8	7	6	5
		20 to 27 Degrees	1	40	36	32	29	27	24	20	17	15	13	12	10
			2	27	24	22	20	18	17	14	12	10	9	8	7
			3	0	0	0	0	0	0	0	0	0	0	0	0
		27 to 45 Degrees	1	35	32	29	26	24	22	18	16	14	12	11	9
			2	18	17	15	14	12	11	10	8	7	6	5	5
			3	14	13	12	10	10	9	7	6	5	5	4	4
11-20 PSF	B	7 to 20 Degrees	1	34	34	34	34	34	32	27	23	20	17	15	13
			2	34	34	32	29	26	24	20	17	15	13	11	10
			3	34	32	29	26	24	22	18	16	13	12	10	9
		20 to 27 Degrees	1	36	36	36	36	36	36	35	30	26	22	20	17
			2	36	36	36	34	31	28	24	20	18	15	14	12
			3	0	0	0	0	0	0	0	0	0	0	0	0
		27 to 45 Degrees	1	41	41	41	41	40	37	31	27	23	20	18	16
			2	31	28	25	23	21	19	16	14	12	11	9	8
			3	24	22	20	18	16	15	13	11	9	8	7	6
	C	7 to 20 Degrees	1	34	33	30	27	25	22	19	16	14	12	11	9
			2	27	24	22	20	18	16	14	12	10	9	8	7
			3	25	22	20	18	17	15	13	11	9	8	7	6
		20 to 27 Degrees	1	36	36	36	35	32	29	24	21	18	16	14	12
			2	33	29	26	24	22	20	17	14	12	11	9	8
			3	0	0	0	0	0	0	0	0	0	0	0	0
		27 to 45 Degrees	1	41	38	34	31	28	26	22	19	16	14	13	11
			2	22	20	18	16	15	14	11	10	8	7	6	6
			3	17	15	14	12	11	10	9	7	6	6	5	4
	D	7 to 20 Degrees	1	31	28	25	23	21	19	16	13	12	10	9	8
			2	23	20	18	17	15	14	12	10	8	7	6	6
			3	21	19	17	15	14	13	11	9	8	7	6	5
		20 to 27 Degrees	1	36	36	32	29	27	24	20	17	15	13	12	10
			2	27	24	22	20	18	17	14	12	10	9	8	7
			3	0	0	0	0	0	0	0	0	0	0	0	0
		27 to 45 Degrees	1	35	32	29	26	24	22	18	16	14	12	11	9
			2	18	17	15	14	12	11	10	8	7	6	5	5
			3	14	13	12	10	10	9	7	6	5	5	4	4

Note: See SML "Roof Area" conversion chart and associated ASCE 7-16 Roof Zones on pages 4-10.

Hip Roof RT15	RT-[E] Mount Mini OSB Only Installations (60 Cell PV Panels) Maximum Mount Spacing in Inches													
Portrait Orientation - ASCE 7-16														
Snow Load	Exposure Category	Roof Angle	Roof Area	Basic Wind Speed, V (mph) 95	100	105	110	115	120	130	140	150	160	170	180
21-30 PSF	B	7 to 20 Degrees	1	29	29	29	29	29	29	27	23	20	17	15	13
			2	29	29	29	29	26	24	20	17	15	13	11	10
			3	29	29	29	26	24	22	18	16	13	12	10	9
		20 to 27 Degrees	1	31	31	31	31	31	31	31	30	26	22	20	17
			2	31	31	31	31	31	28	24	20	18	15	14	12
			3	0	0	0	0	0	0	0	0	0	0	0	0
		27 to 45 Degrees	1	36	36	36	36	36	35	31	27	23	20	18	16
			2	31	28	25	23	21	19	16	14	12	11	9	8
			3	24	22	20	18	16	15	13	11	9	8	7	6
	C	7 to 20 Degrees	1	29	29	29	27	25	22	19	16	14	12	11	9
			2	27	24	22	20	18	16	14	12	10	9	8	7
			3	25	22	20	18	17	15	13	11	9	8	7	6
		20 to 27 Degrees	1	31	31	31	31	30	29	24	21	18	16	14	12
			2	31	29	26	24	22	20	17	14	12	11	9	8
			3	0	0	0	0	0	0	0	0	0	0	0	0
		27 to 45 Degrees	1	36	35	34	31	28	26	22	19	16	14	13	11
			2	22	20	18	16	15	14	11	10	8	7	6	6
			3	17	15	14	12	11	10	9	7	6	6	5	4
	D	7 to 20 Degrees	1	29	28	25	23	21	19	16	13	12	10	9	8
			2	23	20	18	17	15	14	12	10	8	7	6	6
			3	21	19	17	15	14	13	11	9	8	7	6	5
		20 to 27 Degrees	1	31	31	30	29	27	24	20	17	15	13	12	10
			2	27	24	22	20	18	17	14	12	10	9	8	7
			3	0	0	0	0	0	0	0	0	0	0	0	0
		27 to 45 Degrees	1	35	32	29	26	24	22	18	16	14	12	11	9
			2	18	17	15	14	12	11	10	8	7	6	5	5
			3	14	13	12	10	10	9	7	6	5	5	4	4
31-40 PSF	B	7 to 20 Degrees	1	23	23	23	23	23	23	23	23	20	17	15	13
			2	23	23	23	23	23	23	20	17	15	13	11	10
			3	23	23	23	23	23	22	18	16	13	12	10	9
		20 to 27 Degrees	1	24	24	24	24	24	24	24	24	24	22	20	17
			2	24	24	24	24	24	24	24	20	18	15	14	12
			3	0	0	0	0	0	0	0	0	0	0	0	0
		27 to 45 Degrees	1	30	30	30	30	30	51	29	27	23	20	18	16
			2	30	28	25	23	21	19	16	14	12	11	9	8
			3	24	22	20	18	16	15	13	11	9	8	7	6
	C	7 to 20 Degrees	1	23	23	23	23	23	22	19	16	14	12	11	9
			2	23	23	22	20	18	16	14	12	10	9	8	7
			3	23	22	20	18	17	15	13	11	9	8	7	6
		20 to 27 Degrees	1	24	24	24	24	24	24	24	21	18	16	14	12
			2	24	24	24	24	22	20	17	14	12	11	9	8
			3	0	0	0	0	0	0	0	0	0	0	0	0
		27 to 45 Degrees	1	30	30	29	29	28	26	22	19	16	14	13	11
			2	22	20	18	16	15	14	11	10	8	7	6	6
			3	17	15	14	12	11	10	9	7	6	6	5	4
	D	7 to 20 Degrees	1	23	23	23	23	21	19	16	13	12	10	9	8
			2	23	20	18	17	15	14	12	10	8	7	6	6
			3	21	19	17	15	14	13	11	9	8	7	6	5
		20 to 27 Degrees	1	24	24	24	24	24	24	20	17	15	13	12	10
			2	24	24	22	20	18	17	14	12	10	9	8	7
			3	0	0	0	0	0	0	0	0	0	0	0	0
		27 to 45 Degrees	1	29	29	28	26	24	22	18	16	14	12	11	9
			2	18	17	15	14	12	11	10	8	7	6	5	5
			3	14	13	12	10	10	9	7	6	5	5	4	4
41-50 PSF	B	7 to 20 Degrees	1	18	18	18	18	18	18	18	18	18	17	15	13
			2	18	18	18	18	18	18	18	17	15	13	11	10
			3	18	18	18	18	18	18	18	16	13	12	10	9
		20 to 27 Degrees	1	20	20	20	20	20	20	20	20	20	20	20	17
			2	20	20	20	20	20	20	20	20	18	15	14	12
			3	0	0	0	0	0	0	0	0	0	0	0	0
		27 to 45 Degrees	1	25	25	25	25	25	25	25	24	23	20	18	16
			2	25	25	25	23	21	19	16	14	12	11	9	8
			3	24	22	20	18	16	15	13	11	9	8	7	6
	C	7 to 20 Degrees	1	18	18	18	18	18	18	18	16	14	12	11	9
			2	18	18	18	18	18	16	14	12	10	9	8	7
			3	18	18	18	18	17	15	13	11	9	8	7	6
		20 to 27 Degrees	1	20	20	20	20	20	20	20	20	18	16	14	12
			2	20	20	20	20	20	20	17	14	12	11	9	8
			3	0	0	0	0	0	0	0	0	0	0	0	0
		27 to 45 Degrees	1	25	25	25	25	24	24	22	19	16	14	13	11
			2	22	20	18	16	15	14	11	10	8	7	6	6
			3	17	15	14	12	11	10	9	7	6	6	5	4
	D	7 to 20 Degrees	1	18	18	18	18	18	18	16	13	12	10	9	8
			2	18	18	18	17	15	14	12	10	8	7	6	6
			3	18	18	17	15	14	13	11	9	8	7	6	5
		20 to 27 Degrees	1	20	20	20	20	20	20	20	17	15	13	12	10
			2	20	20	20	20	18	17	14	12	10	9	8	7
			3	0	0	0	0	0	0	0	0	0	0	0	0
		27 to 45 Degrees	1	25	25	24	24	23	22	18	16	14	12	11	9
			2	18	17	15	14	12	11	10	8	7	6	5	5
			3	14	13	12	10	10	9	7	6	5	5	4	4

Note: See SML "Roof Area" conversion chart and associated ASCE 7-16 Roof Zones on pages 4-10.

Hip Roof RT15	RT-[E] Mount Mini OSB Only Installations (60 Cell PV Panels) Maximum Mount Spacing in Inches														
	Portrait Orientation - ASCE 7-16														
Snow Load	Exposure Category	Roof Angle	Roof Area	Basic Wind Speed, V (mph)											
				95	100	105	110	115	120	130	140	150	160	170	180
51-60 PSF	B	7 to 20 Degrees	1	15	15	15	15	15	15	15	15	15	15	15	13
			2	15	15	15	15	15	15	15	15	15	13	11	10
			3	15	15	15	15	15	15	15	15	13	12	10	9
		20 to 27 Degrees	1	17	17	17	17	17	17	17	17	17	17	17	17
			2	17	17	17	17	17	17	17	17	17	15	14	12
			3	0	0	0	0	0	0	0	0	0	0	0	0
		27 to 45 Degrees	1	21	21	21	21	21	21	21	21	21	20	18	16
			2	21	21	21	21	21	19	16	14	12	11	9	8
			3	21	21	20	18	16	15	13	11	9	8	7	6
	C	7 to 20 Degrees	1	15	15	15	15	15	15	15	15	14	12	11	9
			2	15	15	15	15	15	15	14	12	10	9	8	7
			3	15	15	15	15	15	15	13	11	9	8	7	6
		20 to 27 Degrees	1	17	17	17	17	17	17	17	17	17	16	14	12
			2	17	17	17	17	17	17	17	14	12	11	9	8
			3	0	0	0	0	0	0	0	0	0	0	0	0
		27 to 45 Degrees	1	21	21	21	21	21	21	20	19	16	14	13	11
			2	21	20	18	16	15	14	11	10	8	7	6	6
			3	17	15	14	12	11	10	9	7	6	6	5	4
	D	7 to 20 Degrees	1	15	15	15	15	15	15	15	13	12	10	9	8
			2	15	15	15	15	15	14	12	10	8	7	6	6
			3	15	15	15	15	14	13	11	9	8	7	6	5
		20 to 27 Degrees	1	17	17	17	17	17	17	17	17	15	13	12	10
			2	17	17	17	17	17	17	14	12	10	9	8	7
			3	0	0	0	0	0	0	0	0	0	0	0	0
		27 to 45 Degrees	1	21	21	21	21	21	20	18	16	14	12	11	9
			2	18	17	15	14	12	11	10	8	7	6	5	5
			3	14	13	12	10	10	9	7	6	5	5	4	4
61-70 PSF	B	7 to 20 Degrees	1	13	13	13	13	13	13	13	13	13	13	13	13
			2	13	13	13	13	13	13	13	13	13	13	11	10
			3	13	13	13	13	13	13	13	13	13	12	10	9
		20 to 27 Degrees	1	14	14	14	14	14	14	14	14	14	14	14	14
			2	14	14	14	14	14	14	14	14	14	14	14	12
			3	0	0	0	0	0	0	0	0	0	0	0	0
		27 to 45 Degrees	1	19	19	19	19	19	19	19	19	19	18	18	16
			2	19	19	19	19	19	19	16	14	12	11	9	8
			3	19	19	19	18	16	15	13	11	9	8	7	6
	C	7 to 20 Degrees	1	13	13	13	13	13	13	13	13	13	12	11	9
			2	13	13	13	13	13	13	13	12	10	9	8	7
			3	13	13	13	13	13	13	13	11	9	8	7	6
		20 to 27 Degrees	1	14	14	14	14	14	14	14	14	14	14	14	12
			2	14	14	14	14	14	14	14	14	12	11	9	8
			3	0	0	0	0	0	0	0	0	0	0	0	0
		27 to 45 Degrees	1	19	19	19	19	19	19	18	18	16	14	13	11
			2	19	19	18	16	15	14	11	10	8	7	6	6
			3	17	15	14	12	11	10	9	7	6	6	5	4
	D	7 to 20 Degrees	1	13	13	13	13	13	13	13	13	12	10	9	8
			2	13	13	13	13	13	13	12	10	8	7	6	6
			3	13	13	13	13	13	13	11	9	8	7	6	5
		20 to 27 Degrees	1	14	14	14	14	14	14	14	14	14	13	12	10
			2	14	14	14	14	14	14	14	12	10	9	8	7
			3	0	0	0	0	0	0	0	0	0	0	0	0
		27 to 45 Degrees	1	19	19	19	19	19	18	18	16	14	12	11	9
			2	18	17	15	14	12	11	10	8	7	6	5	5
			3	14	13	12	10	10	9	7	6	5	5	4	4

Note: See SML "Roof Area" conversion chart and associated ASCE 7-16 Roof Zones on pages 4-10.

Hip Roof RT16

RT-[E] Mount Mini OSB Only Installations
(72 Cell PV Panels)
Maximum Mount Spacing in Inches

Portrait Orientation - ASCE 7-16

Snow Load	Exposure Category	Roof Angle	Roof Area	Basic Wind Speed, V (mph) 95	100	105	110	115	120	130	140	150	160	170	180
0 PSF	B	7 to 20 Degrees	1	48	43	38	34	31	28	24	20	17	15	13	12
			2	35	31	28	25	23	21	17	15	13	11	10	9
			3	32	28	25	23	21	19	16	14	12	10	9	8
		20 to 27 Degrees	1	61	55	49	44	40	37	31	26	23	20	17	15
			2	41	37	33	30	27	25	21	18	15	13	12	10
			3	0	0	0	0	0	0	0	0	0	0	0	0
		27 to 45 Degrees	1	52	47	42	38	35	32	27	23	20	18	16	14
			2	27	25	22	20	18	17	14	12	11	9	8	7
			3	21	19	17	16	14	13	11	9	8	7	6	5
	C	7 to 20 Degrees	1	33	29	26	24	22	20	17	14	12	11	9	8
			2	24	21	19	17	16	14	12	10	9	8	7	6
			3	22	20	18	16	14	13	11	9	8	7	6	5
		20 to 27 Degrees	1	42	38	34	31	28	25	21	18	16	14	12	11
			2	29	26	23	21	19	17	15	12	11	9	8	7
			3	0	0	0	0	0	0	0	0	0	0	0	0
		27 to 45 Degrees	1	37	33	30	27	25	23	19	16	14	12	11	10
			2	19	17	16	14	13	12	10	9	7	6	6	5
			3	15	13	12	11	10	9	8	7	6	5	4	4
	D	7 to 20 Degrees	1	27	24	22	20	18	16	14	12	10	9	8	7
			2	20	18	16	14	13	12	10	9	7	6	6	5
			3	18	16	15	13	12	11	9	8	7	6	5	5
		20 to 27 Degrees	1	35	31	28	26	23	21	18	15	13	11	10	9
			2	24	21	19	17	16	14	12	10	9	8	7	6
			3	0	0	0	0	0	0	0	0	0	0	0	0
		27 to 45 Degrees	1	31	28	25	23	21	19	16	14	12	10	9	8
			2	16	15	13	12	11	10	8	7	6	5	5	4
			3	12	11	10	9	8	8	6	5	5	4	4	3
1-10 PSF	B	7 to 20 Degrees	1	43	43	38	34	31	28	24	20	17	15	13	12
			2	35	31	28	25	23	21	17	15	13	11	10	9
			3	32	28	25	23	21	19	16	14	12	10	9	8
		20 to 27 Degrees	1	44	44	44	44	40	37	31	26	23	20	17	15
			2	41	37	33	30	27	25	21	18	15	13	12	10
			3	0	0	0	0	0	0	0	0	0	0	0	0
		27 to 45 Degrees	1	47	47	42	38	35	32	27	23	20	18	16	14
			2	27	25	22	20	18	17	14	12	11	9	8	7
			3	21	19	17	16	14	13	11	9	8	7	6	5
	C	7 to 20 Degrees	1	33	29	26	24	22	20	17	14	12	11	9	8
			2	24	21	19	17	16	14	12	10	9	8	7	6
			3	22	20	18	16	14	13	11	9	8	7	6	5
		20 to 27 Degrees	1	42	38	34	31	28	25	21	18	16	14	12	11
			2	29	26	23	21	19	17	15	12	11	9	8	7
			3	0	0	0	0	0	0	0	0	0	0	0	0
		27 to 45 Degrees	1	37	33	30	27	25	23	19	16	14	12	11	10
			2	19	17	16	14	13	12	10	9	7	6	6	5
			3	15	13	12	11	10	9	8	7	6	5	4	4
	D	7 to 20 Degrees	1	27	24	22	20	18	16	14	12	10	9	8	7
			2	20	18	16	14	13	12	10	9	7	6	6	5
			3	18	16	15	13	12	11	9	8	7	6	5	5
		20 to 27 Degrees	1	35	31	28	26	23	21	18	15	13	11	10	9
			2	24	21	19	17	16	14	12	10	9	8	7	6
			3	0	0	0	0	0	0	0	0	0	0	0	0
		27 to 45 Degrees	1	31	28	25	23	21	19	16	14	12	10	9	8
			2	16	15	13	12	11	10	8	7	6	5	5	4
			3	12	11	10	9	8	8	6	5	5	4	4	3
11-20 PSF	B	7 to 20 Degrees	1	30	30	30	30	30	28	24	20	17	15	13	12
			2	30	30	28	25	23	21	17	15	13	11	10	9
			3	30	28	25	23	21	19	16	14	12	10	9	8
		20 to 27 Degrees	1	31	31	31	31	31	31	31	26	23	20	17	15
			2	31	31	31	30	27	25	21	18	15	13	12	10
			3	0	0	0	0	0	0	0	0	0	0	0	0
		27 to 45 Degrees	1	36	36	36	36	35	32	27	23	20	18	16	14
			2	27	25	22	20	18	17	14	12	11	9	8	7
			3	21	19	17	16	14	13	11	9	8	7	6	5
	C	7 to 20 Degrees	1	30	29	26	24	22	20	17	14	12	11	9	8
			2	24	21	19	17	16	14	12	10	9	8	7	6
			3	22	20	18	16	14	13	11	9	8	7	6	5
		20 to 27 Degrees	1	31	31	31	31	28	25	21	18	16	14	12	11
			2	29	26	23	21	19	17	15	12	11	9	8	7
			3	0	0	0	0	0	0	0	0	0	0	0	0
		27 to 45 Degrees	1	36	33	30	27	25	23	19	16	14	12	11	10
			2	19	17	16	14	13	12	10	9	7	6	6	5
			3	15	13	12	11	10	9	8	7	6	5	4	4
	D	7 to 20 Degrees	1	27	24	22	20	18	16	14	12	10	9	8	7
			2	20	18	16	14	13	12	10	9	7	6	6	5
			3	18	16	15	13	12	11	9	8	7	6	5	5
		20 to 27 Degrees	1	31	31	28	26	23	21	18	15	13	11	10	9
			2	24	21	19	17	16	14	12	10	9	8	7	6
			3	0	0	0	0	0	0	0	0	0	0	0	0
		27 to 45 Degrees	1	31	28	25	23	21	19	16	14	12	10	9	8
			2	16	15	13	12	11	10	8	7	6	5	5	4
			3	12	11	10	9	8	8	6	5	5	4	4	3

Note: See SML "Roof Area" conversion chart and associated ASCE 7-16 Roof Zones on pages 4-10.

Hip Roof RT16	RT-[E] Mount Mini OSB Only Installations (72 Cell PV Panels) Maximum Mount Spacing in Inches														
	Portrait Orientation - ASCE 7-16														
Snow Load	Exposure Category	Roof Angle	Roof Area	Basic Wind Speed, V (mph) 95	100	105	110	115	120	130	140	150	160	170	180
21-30 PSF	B	7 to 20 Degrees	1	25	25	25	25	25	25	24	20	17	15	13	12
			2	25	25	25	25	23	21	17	15	13	11	10	9
			3	25	25	25	23	21	19	16	14	12	10	9	8
		20 to 27 Degrees	1	27	27	27	27	27	27	27	26	23	20	17	15
			2	27	27	27	27	27	25	21	18	15	13	12	10
			3	0	0	0	0	0	0	0	0	0	0	0	0
		27 to 45 Degrees	1	32	32	32	32	31	31	27	23	20	18	16	14
			2	27	25	22	20	18	17	14	12	11	9	8	7
			3	21	19	17	16	14	13	11	9	8	7	6	5
	C	7 to 20 Degrees	1	25	25	25	24	22	20	17	14	12	11	9	8
			2	24	21	19	17	16	14	12	10	9	8	7	6
			3	22	20	18	16	14	13	11	9	8	7	6	5
		20 to 27 Degrees	1	27	27	27	27	27	25	21	18	16	14	12	11
			2	27	26	23	21	19	17	15	12	11	9	8	7
			3	0	0	0	0	0	0	0	0	0	0	0	0
		27 to 45 Degrees	1	32	31	30	27	25	23	19	16	14	12	11	10
			2	19	17	16	14	13	12	10	9	7	6	6	5
			3	15	13	12	11	10	9	8	7	6	5	4	4
	D	7 to 20 Degrees	1	25	24	22	20	18	16	14	12	10	9	8	7
			2	20	18	16	14	13	12	10	9	7	6	6	5
			3	18	16	15	13	12	11	9	8	7	6	5	5
		20 to 27 Degrees	1	27	27	27	26	23	21	18	15	13	11	10	9
			2	24	21	19	17	16	14	12	10	9	8	7	6
			3	0	0	0	0	0	0	0	0	0	0	0	0
		27 to 45 Degrees	1	30	28	25	23	21	19	16	14	12	10	9	8
			2	16	15	13	12	11	10	8	7	6	5	5	4
			3	12	11	10	9	8	8	6	5	5	4	4	3
31-40 PSF	B	7 to 20 Degrees	1	20	20	20	20	20	20	20	20	17	15	13	12
			2	20	20	20	20	20	20	17	15	13	11	10	9
			3	20	20	20	20	20	19	16	14	12	10	9	8
		20 to 27 Degrees	1	21	21	21	21	21	21	21	21	21	20	17	15
			2	21	21	21	21	21	21	21	18	15	13	12	10
			3	0	0	0	0	0	0	0	0	0	0	0	0
		27 to 45 Degrees	1	27	27	27	27	27	51	25	23	20	18	16	14
			2	27	25	22	20	18	17	14	12	11	9	8	7
			3	21	19	17	16	14	13	11	9	8	7	6	5
	C	7 to 20 Degrees	1	20	20	20	20	20	20	17	14	12	11	9	8
			2	20	20	19	17	16	14	12	10	9	8	7	6
			3	20	20	18	16	14	13	11	9	8	7	6	5
		20 to 27 Degrees	1	21	21	21	21	21	21	21	18	16	14	12	11
			2	21	21	21	21	19	17	15	12	11	9	8	7
			3	0	0	0	0	0	0	0	0	0	0	0	0
		27 to 45 Degrees	1	27	26	26	25	24	23	19	16	14	12	11	10
			2	19	17	16	14	13	12	10	9	7	6	6	5
			3	15	13	12	11	10	9	8	7	6	5	4	4
	D	7 to 20 Degrees	1	20	20	20	20	18	16	14	12	10	9	8	7
			2	20	18	16	14	13	12	10	9	7	6	6	5
			3	18	16	15	13	12	11	9	8	7	6	5	5
		20 to 27 Degrees	1	21	21	21	21	21	21	18	15	13	11	10	9
			2	21	21	19	17	16	14	12	10	9	8	7	6
			3	0	0	0	0	0	0	0	0	0	0	0	0
		27 to 45 Degrees	1	26	25	25	23	21	19	16	14	12	10	9	8
			2	16	15	13	12	11	10	8	7	6	5	5	4
			3	12	11	10	9	8	8	6	5	5	4	4	3
41-50 PSF	B	7 to 20 Degrees	1	16	16	16	16	16	16	16	16	16	15	13	12
			2	16	16	16	16	16	16	16	15	13	11	10	9
			3	16	16	16	16	16	16	16	14	12	10	9	8
		20 to 27 Degrees	1	17	17	17	17	17	17	17	17	17	17	17	15
			2	17	17	17	17	17	17	17	17	15	13	12	10
			3	0	0	0	0	0	0	0	0	0	0	0	0
		27 to 45 Degrees	1	22	22	22	22	22	22	22	21	20	18	16	14
			2	22	22	22	20	18	17	14	12	11	9	8	7
			3	21	19	17	16	14	13	11	9	8	7	6	5
	C	7 to 20 Degrees	1	16	16	16	16	16	16	16	14	12	11	9	8
			2	16	16	16	16	16	14	12	10	9	8	7	6
			3	16	16	16	16	14	13	11	9	8	7	6	5
		20 to 27 Degrees	1	17	17	17	17	17	17	17	17	16	14	12	11
			2	17	17	17	17	17	17	15	12	11	9	8	7
			3	0	0	0	0	0	0	0	0	0	0	0	0
		27 to 45 Degrees	1	22	22	22	22	21	21	19	16	14	12	11	10
			2	19	17	16	14	13	12	10	9	7	6	6	5
			3	15	13	12	11	10	9	8	7	6	5	4	4
	D	7 to 20 Degrees	1	16	16	16	16	16	16	14	12	10	9	8	7
			2	16	16	16	14	13	12	10	9	7	6	6	5
			3	16	16	15	13	12	11	9	8	7	6	5	5
		20 to 27 Degrees	1	17	17	17	17	17	17	17	15	13	11	10	9
			2	17	17	17	17	16	14	12	10	9	8	7	6
			3	0	0	0	0	0	0	0	0	0	0	0	0
		27 to 45 Degrees	1	22	22	21	21	20	19	16	14	12	10	9	8
			2	16	15	13	12	11	10	8	7	6	5	5	4
			3	12	11	10	9	8	8	6	5	5	4	4	3

Note: See SML "Roof Area" conversion chart and associated ASCE 7-16 Roof Zones on pages 4-10.

Hip Roof RT16	RT-[E] Mount Mini OSB Only Installations (72 Cell PV Panels) Maximum Mount Spacing in Inches													
Portrait Orientation - ASCE 7-16														
Snow Load	Exposure Category	Roof Angle	Roof Area	Basic Wind Speed, V (mph) 95	100	105	110	115	120	130	140	150	160	170	180
51-60 PSF	B	7 to 20 Degrees	1	13	13	13	13	13	13	13	13	13	13	13	12
			2	13	13	13	13	13	13	13	13	13	11	10	9
			3	13	13	13	13	13	13	13	13	12	10	9	8
		20 to 27 Degrees	1	15	15	15	15	15	15	15	15	15	15	15	15
			2	15	15	15	15	15	15	15	15	15	13	12	10
			3	0	0	0	0	0	0	0	0	0	0	0	0
		27 to 45 Degrees	1	19	19	19	19	19	19	19	19	18	17	16	14
			2	19	19	19	19	18	17	14	12	11	9	8	7
			3	19	19	17	16	14	13	11	9	8	7	6	5
	C	7 to 20 Degrees	1	13	13	13	13	13	13	13	13	12	11	9	8
			2	13	13	13	13	13	13	12	10	9	8	7	6
			3	13	13	13	13	13	13	11	9	8	7	6	5
		20 to 27 Degrees	1	15	15	15	15	15	15	15	15	15	14	12	11
			2	15	15	15	15	15	15	15	12	11	9	8	7
			3	0	0	0	0	0	0	0	0	0	0	0	0
		27 to 45 Degrees	1	19	19	19	19	19	19	18	16	14	12	11	10
			2	19	17	16	14	13	12	10	9	7	6	6	5
			3	15	13	12	11	10	9	8	7	6	5	4	4
	D	7 to 20 Degrees	1	13	13	13	13	13	13	13	12	10	9	8	7
			2	13	13	13	13	13	12	10	9	7	6	6	5
			3	13	13	13	13	12	11	9	8	7	6	5	5
		20 to 27 Degrees	1	15	15	15	15	15	15	15	15	13	11	10	9
			2	15	15	15	15	15	14	12	10	9	8	7	6
			3	0	0	0	0	0	0	0	0	0	0	0	0
		27 to 45 Degrees	1	19	19	19	19	18	18	16	14	12	10	9	8
			2	16	15	13	12	11	10	8	7	6	5	5	4
			3	12	11	10	9	8	8	6	5	5	4	4	3
61-70 PSF	B	7 to 20 Degrees	1	12	12	12	12	12	12	12	12	12	12	12	12
			2	12	12	12	12	12	12	12	12	12	11	10	9
			3	12	12	12	12	12	12	12	12	12	10	9	8
		20 to 27 Degrees	1	13	13	13	13	13	13	13	13	13	13	13	13
			2	13	13	13	13	13	13	13	13	13	13	12	10
			3	0	0	0	0	0	0	0	0	0	0	0	0
		27 to 45 Degrees	1	16	16	16	16	16	16	16	16	16	16	15	14
			2	16	16	16	16	16	16	14	12	11	9	8	7
			3	16	16	16	16	14	13	11	9	8	7	6	5
	C	7 to 20 Degrees	1	12	12	0	12	12	12	12	12	12	11	9	8
			2	12	12	12	12	12	12	12	10	9	8	7	6
			3	12	12	12	12	12	12	11	9	8	7	6	5
		20 to 27 Degrees	1	13	13	13	13	13	13	13	13	13	13	12	11
			2	13	13	13	13	13	13	13	12	11	9	8	7
			3	0	0	0	0	0	0	0	0	0	0	0	0
		27 to 45 Degrees	1	16	16	16	16	16	16	16	16	14	12	11	10
			2	16	16	16	14	13	12	10	9	7	6	6	5
			3	15	13	12	11	10	9	8	7	6	5	4	4
	D	7 to 20 Degrees	1	12	12	12	12	12	12	12	12	10	9	8	7
			2	12	12	12	12	12	12	10	9	7	6	6	5
			3	12	12	12	12	12	11	9	8	7	6	5	5
		20 to 27 Degrees	1	13	13	13	13	13	13	13	13	13	11	10	9
			2	13	13	13	13	13	13	12	10	9	8	7	6
			3	0	0	0	0	0	0	0	0	0	0	0	0
		27 to 45 Degrees	1	16	16	16	16	16	16	15	14	12	10	9	8
			2	16	15	13	12	11	10	8	7	6	5	5	4
			3	12	11	10	9	8	8	6	5	5	4	4	3

Note: See SML "Roof Area" conversion chart and associated ASCE 7-16 Roof Zones on pages 4-10.

Hip Roof RT17	RT-[E] Mount Mini Rafter Installations Cont. Maximum Mount Spacing in Inches														
Landscape Orientation - ASCE 7-16															
Snow Load	Exposure Category	Roof Angle	Roof Area	Basic Wind Speed, V (mph)											
				95	100	105	110	115	120	130	140	150	160	170	180
0 PSF	B	7 to 20 Degrees	1	96	96	96	96	96	96	96	96	96	88	77	69
			2	96	96	96	96	96	96	96	86	74	65	57	51
			3	96	96	96	96	96	96	92	79	68	60	53	47
		20 to 27 Degrees	1	96	96	96	96	96	96	96	96	96	96	96	88
			2	96	96	96	96	96	96	96	96	88	77	68	61
			3	0	0	0	0	0	0	0	0	0	0	0	0
		27 to 45 Degrees	1	96	96	96	96	96	96	96	96	96	96	89	79
			2	96	96	96	96	96	95	81	70	61	54	48	42
			3	96	96	96	88	81	74	63	55	48	42	37	33
	C	7 to 20 Degrees	1	96	96	96	96	96	96	95	81	70	62	54	48
			2	96	96	96	96	91	83	70	60	52	46	40	36
			3	96	96	96	92	83	76	65	56	48	42	37	33
		20 to 27 Degrees	1	96	96	96	96	96	96	96	96	90	79	70	62
			2	96	96	96	96	96	96	84	72	62	55	48	43
			3	0	0	0	0	0	0	0	0	0	0	0	0
		27 to 45 Degrees	1	96	96	96	96	96	96	96	93	81	71	63	56
			2	96	96	89	81	74	68	58	50	44	38	34	30
			3	84	76	69	63	58	53	45	39	34	30	26	23
	D	7 to 20 Degrees	1	96	96	96	96	96	94	80	68	59	52	46	41
			2	96	96	92	84	76	70	59	51	44	39	34	30
			3	96	94	85	77	70	64	54	47	41	35	31	28
		20 to 27 Degrees	1	96	96	96	96	96	96	96	87	76	66	59	52
			2	96	96	96	96	91	83	71	61	53	46	41	36
			3	0	0	0	0	0	0	0	0	0	0	0	0
		27 to 45 Degrees	1	96	96	96	96	96	96	91	79	69	60	54	48
			2	92	83	75	68	63	58	49	42	37	32	29	25
			3	71	64	58	53	49	45	38	33	29	25	22	20
1-10 PSF	B	7 to 20 Degrees	1	96	96	96	96	96	96	96	96	96	88	77	69
			2	96	96	96	96	96	96	96	86	74	65	57	51
			3	96	96	96	96	96	96	92	79	68	60	53	47
		20 to 27 Degrees	1	96	96	96	96	96	96	96	96	96	96	96	88
			2	96	96	96	96	96	96	96	96	88	77	68	61
			3	0	0	0	0	0	0	0	0	0	0	0	0
		27 to 45 Degrees	1	96	96	96	96	96	96	96	96	96	96	89	79
			2	96	96	96	96	96	95	81	70	61	54	48	42
			3	96	96	96	88	81	74	63	55	48	42	37	33
	C	7 to 20 Degrees	1	96	96	96	96	96	96	95	81	70	62	54	48
			2	96	96	96	96	91	83	70	60	52	46	40	36
			3	96	96	96	92	83	76	65	56	48	42	37	33
		20 to 27 Degrees	1	96	96	96	96	96	96	0	96	90	79	70	62
			2	96	96	96	96	96	96	84	72	62	55	48	43
			3	0	0	0	0	0	0	0	0	0	0	0	0
		27 to 45 Degrees	1	96	96	96	96	96	96	96	93	81	71	63	56
			2	96	96	89	81	74	68	58	50	44	38	34	30
			3	84	76	69	63	58	53	45	39	34	30	26	23
	D	7 to 20 Degrees	1	96	96	96	96	96	94	80	68	59	52	46	41
			2	96	96	92	84	76	70	59	51	44	39	34	30
			3	96	94	85	77	70	64	54	47	41	35	31	28
		20 to 27 Degrees	1	96	96	96	96	96	96	96	87	76	66	59	52
			2	96	96	96	96	91	83	71	61	53	46	41	36
			3	0	0	0	0	0	0	0	0	0	0	0	0
		27 to 45 Degrees	1	96	96	96	96	96	96	91	79	69	60	54	48
			2	92	83	75	68	63	58	49	42	37	32	29	25
			3	71	64	58	53	49	45	38	33	29	25	22	20
11-20 PSF	B	7 to 20 Degrees	1	96	96	96	96	96	96	96	96	96	88	77	69
			2	96	96	96	96	96	96	96	86	74	65	57	51
			3	96	96	96	96	96	96	92	79	68	60	53	47
		20 to 27 Degrees	1	96	96	96	96	96	96	96	96	96	96	96	88
			2	96	96	96	96	96	96	96	96	88	77	68	61
			3	0	0	0	0	0	0	0	0	0	0	0	0
		27 to 45 Degrees	1	96	96	96	96	96	96	96	96	96	96	89	79
			2	96	96	96	96	96	95	81	70	61	54	48	42
			3	96	96	96	88	81	74	63	55	48	42	37	33
	C	7 to 20 Degrees	1	96	96	96	96	96	96	95	81	70	62	54	48
			2	96	96	96	96	91	83	70	60	52	46	40	36
			3	96	96	96	92	83	76	65	56	48	42	37	33
		20 to 27 Degrees	1	96	96	96	96	96	96	96	96	90	79	70	62
			2	96	96	96	96	96	96	84	72	62	55	48	43
			3	0	0	0	0	0	0	0	0	0	0	0	0
		27 to 45 Degrees	1	96	96	96	96	96	96	96	93	81	71	63	56
			2	96	96	89	81	74	68	58	50	44	38	34	30
			3	84	76	69	63	58	53	45	39	34	30	26	23
	D	7 to 20 Degrees	1	96	96	96	96	96	94	80	68	59	52	46	41
			2	96	96	92	84	76	70	59	51	44	39	34	30
			3	96	94	85	77	70	64	54	47	41	35	31	28
		20 to 27 Degrees	1	96	96	96	96	96	96	96	87	76	66	59	52
			2	96	96	96	96	91	83	71	61	53	46	41	36
			3	0	0	0	0	0	0	0	0	0	0	0	0
		27 to 45 Degrees	1	96	96	96	96	96	96	91	79	69	60	54	48
			2	92	83	75	68	63	58	49	42	37	32	29	25
			3	71	64	58	53	49	45	38	33	29	25	22	20

Note: See SML "Roof Area" conversion chart and associated ASCE 7-16 Roof Zones on pages 4-10.

Hip Roof RT17	RT-[E] Mount Mini Rafter Installations Cont. Maximum Mount Spacing in Inches													
Landscape Orientation - ASCE 7-16														
Snow Load	Exposure Category	Roof Angle	Roof Area	Basic Wind Speed, V (mph) 95	100	105	110	115	120	130	140	150	160	170	180
21-30 PSF	B	7 to 20 Degrees	1	96	96	96	96	96	96	96	96	96	88	77	69
			2	96	96	96	96	96	96	96	86	74	65	57	51
			3	96	96	96	96	96	96	92	79	68	60	53	47
		20 to 27 Degrees	1	96	96	96	96	96	96	96	96	96	96	96	88
			2	96	96	96	96	96	96	96	96	88	77	68	61
			3	0	0	0	0	0	0	0	0	0	0	0	0
		27 to 45 Degrees	1	96	96	96	96	96	96	96	96	96	96	89	79
			2	96	96	96	96	96	95	81	70	61	54	48	42
			3	96	96	96	88	81	74	63	55	48	42	37	33
	C	7 to 20 Degrees	1	96	96	96	96	96	96	95	81	70	62	54	48
			2	96	96	96	96	91	83	70	60	52	46	40	36
			3	96	96	96	92	83	76	65	56	48	42	37	33
		20 to 27 Degrees	1	96	96	96	96	96	96	96	96	90	79	70	62
			2	96	96	96	96	96	96	84	72	62	55	48	43
			3	0	0	0	0	0	0	0	0	0	0	0	0
		27 to 45 Degrees	1	96	96	96	96	96	96	96	93	81	71	63	56
			2	96	96	89	81	74	68	58	50	44	38	34	30
			3	84	76	69	63	58	53	45	39	34	30	26	23
	D	7 to 20 Degrees	1	96	96	96	96	96	94	80	68	59	52	46	41
			2	96	96	92	84	76	70	59	51	44	39	34	30
			3	96	94	85	77	70	64	54	47	41	35	31	28
		20 to 27 Degrees	1	96	96	96	96	96	96	96	87	76	66	59	52
			2	96	96	96	96	91	83	71	61	53	46	41	36
			3	0	0	0	0	0	0	0	0	0	0	0	0
		27 to 45 Degrees	1	96	96	96	96	96	96	91	79	69	60	54	48
			2	92	83	75	68	63	58	49	42	37	32	29	25
			3	71	64	58	53	49	45	38	33	29	25	22	20
31-40 PSF	B	7 to 20 Degrees	1	96	96	96	96	96	96	96	96	96	88	77	69
			2	96	96	96	96	96	96	96	86	74	65	57	51
			3	96	96	96	96	96	96	92	79	68	60	53	47
		20 to 27 Degrees	1	96	96	96	96	96	96	96	96	96	96	96	88
			2	96	96	96	96	96	96	96	96	88	77	68	61
			3	0	0	0	0	0	0	0	0	0	0	0	0
		27 to 45 Degrees	1	96	96	96	96	96	96	96	96	96	96	89	79
			2	96	96	96	96	96	95	81	70	61	54	48	42
			3	96	96	96	88	81	74	63	55	48	42	37	33
	C	7 to 20 Degrees	1	96	96	96	96	96	96	95	81	70	62	54	48
			2	96	96	96	96	91	83	70	60	52	46	40	36
			3	96	96	96	92	83	76	65	56	48	42	37	33
		20 to 27 Degrees	1	96	96	96	96	96	96	96	96	90	79	70	62
			2	96	96	96	96	96	96	84	72	62	55	48	43
			3	0	0	0	0	0	0	0	0	0	0	0	0
		27 to 45 Degrees	1	96	96	96	96	96	96	96	93	81	71	63	56
			2	96	96	89	81	74	68	58	50	44	38	34	30
			3	84	76	69	63	58	53	45	39	34	30	26	23
	D	7 to 20 Degrees	1	96	96	96	96	96	94	80	68	59	52	46	41
			2	96	96	92	84	76	70	59	51	44	39	34	30
			3	96	94	85	77	70	64	54	47	41	35	31	28
		20 to 27 Degrees	1	96	96	96	96	96	96	96	87	76	66	59	52
			2	96	96	96	96	91	83	71	61	53	46	41	36
			3	0	0	0	0	0	0	0	0	0	0	0	0
		27 to 45 Degrees	1	96	96	96	96	96	96	91	79	69	60	54	48
			2	92	83	75	68	63	58	49	42	37	32	29	25
			3	71	64	58	53	49	45	38	33	29	25	22	20
41-50 PSF	B	7 to 20 Degrees	1	96	96	96	96	96	96	96	96	96	88	77	69
			2	96	96	96	96	96	96	96	86	74	65	57	51
			3	96	96	96	96	96	96	92	79	68	60	53	47
		20 to 27 Degrees	1	96	96	96	96	96	96	96	96	96	96	96	88
			2	96	96	96	96	96	96	96	96	88	77	68	61
			3	0	0	0	0	0	0	0	0	0	0	0	0
		27 to 45 Degrees	1	96	96	96	96	96	96	96	96	96	96	89	79
			2	96	96	96	96	96	95	81	70	61	54	48	42
			3	96	96	96	88	81	74	63	55	48	42	37	33
	C	7 to 20 Degrees	1	96	96	96	96	96	96	95	81	70	62	54	48
			2	96	96	96	96	91	83	70	60	52	46	40	36
			3	96	96	96	92	83	76	65	56	48	42	37	33
		20 to 27 Degrees	1	96	96	96	96	96	96	96	96	90	79	70	62
			2	96	96	96	96	96	96	84	72	62	55	48	43
			3	0	0	0	0	0	0	0	0	0	0	0	0
		27 to 45 Degrees	1	96	96	96	96	96	96	96	93	81	71	63	56
			2	96	96	89	81	74	68	58	50	44	38	34	30
			3	84	76	69	63	58	53	45	39	34	30	26	23
	D	7 to 20 Degrees	1	96	96	96	96	96	94	80	68	59	52	46	41
			2	96	96	92	84	76	70	59	51	44	39	34	30
			3	96	94	85	77	70	64	54	47	41	35	31	28
		20 to 27 Degrees	1	96	96	96	96	96	96	96	87	76	66	59	52
			2	96	96	96	96	91	83	71	61	53	46	41	36
			3	0	0	0	0	0	0	0	0	0	0	0	0
		27 to 45 Degrees	1	96	96	96	96	96	96	91	79	69	60	54	48
			2	92	83	75	68	63	58	49	42	37	32	29	25
			3	71	64	58	53	49	45	38	33	29	25	22	20

Note: See SML "Roof Area" conversion chart and associated ASCE 7-16 Roof Zones on pages 4-10.

Hip Roof RT17	RT-[E] Mount Mini Rafter Installations Cont. Maximum Mount Spacing in Inches														
Landscape Orientation - ASCE 7-16															
Snow Load	Exposure Category	Roof Angle	Roof Area	Basic Wind Speed, V (mph)											
				95	100	105	110	115	120	130	140	150	160	170	180
51-60 PSF	B	7 to 20 Degrees	1	96	96	96	96	96	96	96	96	96	88	77	69
			2	96	96	96	96	96	96	96	86	74	65	57	51
			3	96	96	96	96	96	96	92	79	68	60	53	47
		20 to 27 Degrees	1	96	96	96	96	96	96	96	96	96	96	96	88
			2	96	96	96	96	96	96	96	96	88	77	68	61
			3	0	0	0	0	0	0	0	0	0	0	0	0
		27 to 45 Degrees	1	96	96	96	96	96	96	96	96	96	96	89	79
			2	96	96	96	96	96	95	81	70	61	54	48	42
			3	96	96	96	88	81	74	63	55	48	42	37	33
	C	7 to 20 Degrees	1	96	96	96	96	96	96	95	81	70	62	54	48
			2	96	96	96	96	91	83	70	60	52	46	40	36
			3	96	96	96	92	83	76	65	56	48	42	37	33
		20 to 27 Degrees	1	96	96	96	96	96	96	96	96	90	79	70	62
			2	96	96	96	96	96	96	84	72	62	55	48	43
			3	0	0	0	0	0	0	0	0	0	0	0	0
		27 to 45 Degrees	1	96	96	96	96	96	96	96	93	81	71	63	56
			2	96	96	89	81	74	68	58	50	44	38	34	30
			3	84	76	69	63	58	53	45	39	34	30	26	23
	D	7 to 20 Degrees	1	96	96	96	96	96	94	80	68	59	52	46	41
			2	96	96	92	84	76	70	59	51	44	39	34	30
			3	96	94	85	77	70	64	54	47	41	35	31	28
		20 to 27 Degrees	1	96	96	96	96	96	96	96	87	76	66	59	52
			2	96	96	96	96	91	83	71	61	53	46	41	36
			3	0	0	0	0	0	0	0	0	0	0	0	0
		27 to 45 Degrees	1	96	96	96	96	96	96	91	79	69	60	54	48
			2	92	83	75	68	63	58	49	42	37	32	29	25
			3	71	64	58	53	49	45	38	33	29	25	22	20
61-70 PSF	B	7 to 20 Degrees	1	96	96	96	96	96	96	96	96	96	88	77	69
			2	96	96	96	96	96	96	96	86	74	65	57	51
			3	96	96	96	96	96	96	92	79	68	60	53	47
		20 to 27 Degrees	1	96	96	96	96	96	96	96	96	96	96	96	88
			2	96	96	96	96	96	96	96	96	88	77	68	61
			3	0	0	0	0	0	0	0	0	0	0	0	0
		27 to 45 Degrees	1	96	96	96	96	96	96	96	96	96	96	89	79
			2	96	96	96	96	96	95	81	70	61	54	48	42
			3	96	96	96	88	81	74	63	55	48	42	37	33
	C	7 to 20 Degrees	1	96	96	96	96	96	96	95	81	70	62	54	48
			2	96	96	96	96	91	83	70	60	52	46	40	36
			3	96	96	96	92	83	76	65	56	48	42	37	33
		20 to 27 Degrees	1	96	96	96	96	96	96	96	96	90	79	70	62
			2	96	96	96	96	96	96	84	72	62	55	48	43
			3	0	0	0	0	0	0	0	0	0	0	0	0
		27 to 45 Degrees	1	96	96	96	96	96	96	96	93	81	71	63	56
			2	96	96	89	81	74	68	58	50	44	38	34	30
			3	84	76	69	63	58	53	45	39	34	30	26	23
	D	7 to 20 Degrees	1	96	96	96	96	96	94	80	68	59	52	46	41
			2	96	96	92	84	76	70	59	51	44	39	34	30
			3	96	94	85	77	70	64	54	47	41	35	31	28
		20 to 27 Degrees	1	96	96	96	96	96	96	96	87	76	66	59	52
			2	96	96	96	96	91	83	71	61	53	46	41	36
			3	0	0	0	0	0	0	0	0	0	0	0	0
		27 to 45 Degrees	1	96	96	96	96	96	96	91	79	69	60	54	48
			2	92	83	75	68	63	58	49	42	37	32	29	25
			3	71	64	58	53	49	45	38	33	29	25	22	20

Note: See SML "Roof Area" conversion chart and associated ASCE 7-16 Roof Zones on pages 4-10.

Hip Roof RT18

RT-[E] Mount Mini Plywood Only Installations Cont.
Maximum Mount Spacing in Inches

Landscape Orientation - ASCE 7-16

Snow Load	Exposure Category	Roof Angle	Roof Area	Basic Wind Speed, V (mph) 95	100	105	110	115	120	130	140	150	160	170	180
0 PSF	B	7 to 20 Degrees	1	96	96	89	80	72	66	55	47	41	35	31	28
			2	80	72	64	58	53	48	41	35	30	26	23	20
			3	74	66	59	53	48	44	37	32	28	24	21	19
		20 to 27 Degrees	1	96	96	96	96	94	85	72	61	53	46	40	36
			2	96	86	77	70	63	58	49	42	36	31	28	25
			3	0	0	0	0	0	0	0	0	0	0	0	0
		27 to 45 Degrees	1	96	96	96	90	82	75	64	55	47	41	37	32
			2	64	57	52	47	43	39	33	29	25	22	19	17
			3	49	44	40	36	33	30	26	22	19	17	15	13
	C	7 to 20 Degrees	1	76	68	61	55	50	46	38	33	28	25	22	19
			2	55	50	45	40	37	34	28	24	21	18	16	14
			3	51	46	41	37	34	31	26	22	19	17	15	13
		20 to 27 Degrees	1	96	88	79	71	65	59	50	42	37	32	28	25
			2	67	60	54	49	44	40	34	29	25	22	19	17
			3	0	0	0	0	0	0	0	0	0	0	0	0
		27 to 45 Degrees	1	86	77	70	63	58	53	45	38	33	29	26	23
			2	45	40	37	33	30	28	24	20	18	15	14	12
			3	35	31	28	26	23	21	18	16	13	12	10	9
	D	7 to 20 Degrees	1	63	57	51	46	42	38	32	28	24	21	18	16
			2	46	41	37	34	31	28	24	20	18	15	13	12
			3	42	38	34	31	28	26	22	19	16	14	12	11
		20 to 27 Degrees	1	82	73	66	59	54	49	42	36	31	27	24	21
			2	56	50	45	41	37	34	29	24	21	18	16	14
			3	0	0	0	0	0	0	0	0	0	0	0	0
		27 to 45 Degrees	1	72	65	59	53	49	44	38	32	28	25	22	19
			2	38	34	31	28	26	23	20	17	15	13	11	10
			3	29	26	24	22	20	18	15	13	11	10	9	8
1-10 PSF	B	7 to 20 Degrees	1	96	96	89	80	72	66	55	47	41	35	31	28
			2	80	72	64	58	53	48	41	35	30	26	23	20
			3	74	66	59	53	48	44	37	32	28	24	21	19
		20 to 27 Degrees	1	96	96	96	96	94	85	72	61	53	46	40	36
			2	96	86	77	70	63	58	49	42	36	31	28	25
			3	0	0	0	0	0	0	0	0	0	0	0	0
		27 to 45 Degrees	1	96	96	96	90	82	75	64	55	47	41	37	32
			2	64	57	52	47	43	39	33	29	25	22	19	17
			3	49	44	40	36	33	30	26	22	19	17	15	13
	C	7 to 20 Degrees	1	76	68	61	55	50	46	38	33	28	25	22	19
			2	55	50	45	40	37	34	28	24	21	18	16	14
			3	51	46	41	37	34	31	26	22	19	17	15	13
		20 to 27 Degrees	1	96	88	79	71	65	59	50	42	37	32	28	25
			2	67	60	54	49	44	40	34	29	25	22	19	17
			3	0	0	0	0	0	0	0	0	0	0	0	0
		27 to 45 Degrees	1	86	77	70	63	58	53	45	38	33	29	26	23
			2	45	40	37	33	30	28	24	20	18	15	14	12
			3	35	31	28	26	23	21	18	16	13	12	10	9
	D	7 to 20 Degrees	1	63	57	51	46	42	38	32	28	24	21	18	16
			2	46	41	37	34	31	28	24	20	18	15	13	12
			3	42	38	34	31	28	26	22	19	16	14	12	11
		20 to 27 Degrees	1	82	73	66	59	54	49	42	36	31	27	24	21
			2	56	50	45	41	37	34	29	24	21	18	16	14
			3	0	0	0	0	0	0	0	0	0	0	0	0
		27 to 45 Degrees	1	72	65	59	53	49	44	38	32	28	25	22	19
			2	38	34	31	28	26	23	20	17	15	13	11	10
			3	29	26	24	22	20	18	15	13	11	10	9	8
11-20 PSF	B	7 to 20 Degrees	1	96	96	89	80	72	66	55	47	41	35	31	28
			2	80	72	64	58	53	48	41	35	30	26	23	20
			3	74	66	59	53	48	44	37	32	28	24	21	19
		20 to 27 Degrees	1	96	96	96	96	94	85	72	61	53	46	40	36
			2	96	86	77	70	63	58	49	42	36	31	28	25
			3	0	0	0	0	0	0	0	0	0	0	0	0
		27 to 45 Degrees	1	96	96	96	90	82	75	64	55	47	41	37	32
			2	64	57	52	47	43	39	33	29	25	22	19	17
			3	49	44	40	36	33	30	26	22	19	17	15	13
	C	7 to 20 Degrees	1	76	68	61	55	50	46	38	33	28	25	22	19
			2	55	50	45	40	37	34	28	24	21	18	16	14
			3	51	46	41	37	34	31	26	22	19	17	15	13
		20 to 27 Degrees	1	96	88	79	71	65	59	50	42	37	32	28	25
			2	67	60	54	49	44	40	34	29	25	22	19	17
			3	0	0	0	0	0	0	0	0	0	0	0	0
		27 to 45 Degrees	1	86	77	70	63	58	53	45	38	33	29	26	23
			2	45	40	37	33	30	28	24	20	18	15	14	12
			3	35	31	28	26	23	21	18	16	13	12	10	9
	D	7 to 20 Degrees	1	63	57	51	46	42	38	32	28	24	21	18	16
			2	46	41	37	34	31	28	24	20	18	15	13	12
			3	42	38	34	31	28	26	22	19	16	14	12	11
		20 to 27 Degrees	1	82	73	66	59	54	49	42	36	31	27	24	21
			2	56	50	45	41	37	34	29	24	21	18	16	14
			3	0	0	0	0	0	0	0	0	0	0	0	0
		27 to 45 Degrees	1	72	65	59	53	49	44	38	32	28	25	22	19
			2	38	34	31	28	26	23	20	17	15	13	11	10
			3	29	26	24	22	20	18	15	13	11	10	9	8

Note: See SML "Roof Area" conversion chart and associated ASCE 7-16 Roof Zones on pages 4-10.

Hip Roof RT18

RT-[E] Mount Mini Plywood Only Installations Cont.
Maximum Mount Spacing in Inches

Landscape Orientation - ASCE 7-16

Snow Load	Exposure Category	Roof Angle	Roof Area	Basic Wind Speed, V (mph) 95	100	105	110	115	120	130	140	150	160	170	180
21-30 PSF	B	7 to 20 Degrees	1	95	95	89	80	72	66	55	47	41	35	31	28
			2	80	72	64	58	53	48	41	35	30	26	23	20
			3	74	66	59	53	48	44	37	32	28	24	21	19
		20 to 27 Degrees	1	96	96	96	96	94	85	72	61	53	46	40	36
			2	96	86	77	70	63	58	49	42	36	31	28	25
			3	0	0	0	0	0	0	0	0	0	0	0	0
		27 to 45 Degrees	1	96	96	96	90	82	75	64	55	47	41	37	32
			2	64	57	52	47	43	39	33	29	25	22	19	17
			3	49	44	40	36	33	30	26	22	19	17	15	13
	C	7 to 20 Degrees	1	76	68	61	55	50	46	38	33	28	25	22	19
			2	55	50	45	40	37	34	28	24	21	18	16	14
			3	51	46	41	37	34	31	26	22	19	17	15	13
		20 to 27 Degrees	1	96	88	79	71	65	59	50	42	37	32	28	25
			2	67	60	54	49	44	40	34	29	25	22	19	17
			3	0	0	0	0	0	0	0	0	0	0	0	0
		27 to 45 Degrees	1	86	77	70	63	58	53	45	38	33	29	26	23
			2	45	40	37	33	30	28	24	20	18	15	14	12
			3	35	31	28	26	23	21	18	16	13	12	10	9
	D	7 to 20 Degrees	1	63	57	51	46	42	38	32	28	24	21	18	16
			2	46	41	37	34	31	28	24	20	18	15	13	12
			3	42	38	34	31	28	26	22	19	16	14	12	11
		20 to 27 Degrees	1	82	73	66	59	54	49	42	36	31	27	24	21
			2	56	50	45	41	37	34	29	24	21	18	16	14
			3	0	0	0	0	0	0	0	0	0	0	0	0
		27 to 45 Degrees	1	72	65	59	53	49	44	38	32	28	25	22	19
			2	38	34	31	28	26	23	20	17	15	13	11	10
			3	29	26	24	22	20	18	15	13	11	10	9	8
31-40 PSF	B	7 to 20 Degrees	1	74	74	74	74	72	66	55	47	41	35	31	28
			2	74	72	64	58	53	48	41	35	30	26	23	20
			3	74	66	59	53	48	44	37	32	28	24	21	19
		20 to 27 Degrees	1	76	76	76	76	76	76	72	61	53	46	40	36
			2	76	76	76	70	63	58	49	42	36	31	28	25
			3	0	0	0	0	0	0	0	0	0	0	0	0
		27 to 45 Degrees	1	91	91	91	90	82	75	64	55	47	41	37	32
			2	64	57	52	47	43	39	33	29	25	22	19	17
			3	49	44	40	36	33	30	26	22	19	17	15	13
	C	7 to 20 Degrees	1	74	68	61	55	50	46	38	33	28	25	22	19
			2	55	50	45	40	37	34	28	24	21	18	16	14
			3	51	46	41	37	34	31	26	22	19	17	15	13
		20 to 27 Degrees	1	76	76	76	71	65	59	50	42	37	32	28	25
			2	67	60	54	49	44	40	34	29	25	22	19	17
			3	0	0	0	0	0	0	0	0	0	0	0	0
		27 to 45 Degrees	1	86	77	70	63	58	53	45	38	33	29	26	23
			2	45	40	37	33	30	28	24	20	18	15	14	12
			3	35	31	28	26	23	21	18	16	13	12	10	9
	D	7 to 20 Degrees	1	63	57	51	46	42	38	32	28	24	21	18	16
			2	46	41	37	34	31	28	24	20	18	15	13	12
			3	42	38	34	31	28	26	22	19	16	14	12	11
		20 to 27 Degrees	1	76	73	66	59	54	49	42	36	31	27	24	21
			2	56	50	45	41	37	34	29	24	21	18	16	14
			3	0	0	0	0	0	0	0	0	0	0	0	0
		27 to 45 Degrees	1	72	65	59	53	49	44	38	32	28	25	22	19
			2	38	34	31	28	26	23	20	17	15	13	11	10
			3	29	26	24	22	20	18	15	13	11	10	9	8
41-50 PSF	B	7 to 20 Degrees	1	61	61	61	61	61	61	55	47	41	35	31	28
			2	61	61	61	58	53	48	41	35	30	26	23	20
			3	61	61	59	53	48	44	37	32	28	24	21	19
		20 to 27 Degrees	1	63	63	63	63	63	63	63	61	53	46	40	36
			2	63	63	63	63	63	58	49	42	36	31	28	25
			3	0	0	0	0	0	0	0	0	0	0	0	0
		27 to 45 Degrees	1	76	76	76	76	76	75	64	55	47	41	37	32
			2	64	57	52	47	43	39	33	29	25	22	19	17
			3	49	44	40	36	33	30	26	22	19	17	15	13
	C	7 to 20 Degrees	1	61	61	61	55	50	46	38	33	28	25	22	19
			2	55	50	45	40	37	34	28	24	21	18	16	14
			3	51	46	41	37	34	31	26	22	19	17	15	13
		20 to 27 Degrees	1	63	63	63	63	63	59	50	42	37	32	28	25
			2	63	60	54	49	44	40	34	29	25	22	19	17
			3	0	0	0	0	0	0	0	0	0	0	0	0
		27 to 45 Degrees	1	76	76	70	63	58	53	45	38	33	29	26	23
			2	45	40	37	33	30	28	24	20	18	15	14	12
			3	35	31	28	26	23	21	18	16	13	12	10	9
	D	7 to 20 Degrees	1	61	57	51	46	42	38	32	28	24	21	18	16
			2	46	41	37	34	31	28	24	20	18	15	13	12
			3	42	38	34	31	28	26	22	19	16	14	12	11
		20 to 27 Degrees	1	63	63	63	59	54	49	42	36	31	27	24	21
			2	56	50	45	41	37	34	29	24	21	18	16	14
			3	0	0	0	0	0	0	0	0	0	0	0	0
		27 to 45 Degrees	1	72	65	59	53	49	44	38	32	28	25	22	19
			2	38	34	31	28	26	23	20	17	15	13	11	10
			3	29	26	24	22	20	18	15	13	11	10	9	8

Note: See SML "Roof Area" conversion chart and associated ASCE 7-16 Roof Zones on pages 4-10.

Hip Roof RT18	RT-[E] Mount Mini Plywood Only Installations Cont. Maximum Mount Spacing in Inches														
Landscape Orientation - ASCE 7-16															
Snow Load	Exposure Category	Roof Angle	Roof Area	Basic Wind Speed, V (mph)											
				95	100	105	110	115	120	130	140	150	160	170	180
51-60 PSF	B	7 to 20 Degrees	1	51	51	51	51	51	51	51	47	41	35	31	28
			2	51	51	51	51	51	48	41	35	30	26	23	20
			3	51	51	51	51	48	44	37	32	28	24	21	19
		20 to 27 Degrees	1	53	53	53	53	53	53	53	53	53	46	40	36
			2	53	53	53	53	53	53	49	42	36	31	28	25
			3	0	0	0	0	0	0	0	0	0	0	0	0
		27 to 45 Degrees	1	64	64	64	64	64	64	64	55	47	41	37	32
			2	64	57	52	47	43	39	33	29	25	22	19	17
			3	49	44	40	36	33	30	26	22	19	17	15	13
	C	7 to 20 Degrees	1	51	51	51	51	50	46	38	33	28	25	22	19
			2	51	50	45	40	37	34	28	24	21	18	16	14
			3	51	46	41	37	34	31	26	22	19	17	15	13
		20 to 27 Degrees	1	53	53	53	53	53	53	50	42	37	32	28	25
			2	53	53	53	49	44	40	34	29	25	22	19	17
			3	0	0	0	0	0	0	0	0	0	0	0	0
		27 to 45 Degrees	1	64	64	64	63	58	53	45	38	33	29	26	23
			2	45	40	37	33	30	28	24	20	18	15	14	12
			3	35	31	28	26	23	21	18	16	13	12	10	9
	D	7 to 20 Degrees	1	51	51	51	46	50	38	32	28	24	21	18	16
			2	46	41	37	34	31	28	24	20	18	15	13	12
			3	42	38	34	31	28	26	22	19	16	14	12	11
		20 to 27 Degrees	1	53	53	53	53	53	49	42	36	31	27	24	21
			2	53	50	45	41	37	34	29	24	21	18	16	14
			3	0	0	0	0	0	0	0	0	0	0	0	0
		27 to 45 Degrees	1	64	64	59	53	49	44	38	32	28	25	22	19
			2	38	34	31	28	26	23	20	17	15	13	11	10
			3	29	26	24	22	20	18	15	13	11	10	9	8
61-70 PSF	B	7 to 20 Degrees	1	44	44	44	44	44	44	44	44	41	35	31	28
			2	44	44	44	44	44	44	41	35	30	26	23	20
			3	44	44	44	44	44	44	37	32	28	24	21	19
		20 to 27 Degrees	1	46	46	46	46	46	46	46	46	46	46	40	36
			2	46	46	46	46	46	46	46	42	36	31	28	25
			3	0	0	0	0	0	0	0	0	0	0	0	0
		27 to 45 Degrees	1	56	56	56	56	56	56	56	55	47	41	37	32
			2	56	56	52	47	43	39	33	29	25	22	19	17
			3	49	44	40	36	33	30	26	22	19	17	15	13
	C	7 to 20 Degrees	1	44	44	44	44	44	44	38	33	28	25	22	19
			2	44	44	44	40	37	34	28	24	21	18	16	14
			3	44	44	41	37	34	31	26	22	19	17	15	13
		20 to 27 Degrees	1	46	46	46	46	46	46	46	42	37	32	28	25
			2	46	46	46	46	44	40	34	29	25	22	19	17
			3	0	0	0	0	0	0	0	0	0	0	0	0
		27 to 45 Degrees	1	56	56	56	56	56	53	45	38	33	29	26	23
			2	45	40	37	33	30	28	24	20	18	15	14	12
			3	35	31	28	26	23	21	18	16	13	12	10	9
	D	7 to 20 Degrees	1	44	44	44	44	42	38	32	28	24	21	18	16
			2	44	41	37	34	31	28	24	20	18	15	13	12
			3	42	38	34	31	28	26	22	19	16	14	12	11
		20 to 27 Degrees	1	46	46	46	46	46	46	42	36	31	27	24	21
			2	46	46	45	41	37	34	29	24	21	18	16	14
			3	0	0	0	0	0	0	0	0	0	0	0	0
		27 to 45 Degrees	1	56	56	56	53	49	44	38	32	28	25	22	19
			2	38	34	31	28	26	23	20	17	15	13	11	10
			3	29	26	24	22	20	18	15	13	11	10	9	8

Note: See SML "Roof Area" conversion chart and associated ASCE 7-16 Roof Zones on pages 4-10.

Hip Roof RT19	RT-[E] Mount Mini OSB Only Installations Cont. Maximum Mount Spacing in Inches														
Landscape Orientation - ASCE 7-16															
Snow Load	Exposure Category	Roof Angle	Roof Area	Basic Wind Speed, V (mph)											
				95	100	105	110	115	120	130	140	150	160	170	180
0 PSF	B	7 to 20 Degrees	1	94	83	75	67	61	56	47	40	34	30	26	23
			2	68	60	54	49	45	41	34	29	25	22	19	17
			3	62	55	50	45	41	37	31	27	23	20	18	16
		20 to 27 Degrees	1	96	96	96	87	79	72	60	51	44	39	34	30
			2	81	72	65	59	53	49	41	35	30	26	23	21
			3	0	0	0	0	0	0	0	0	0	0	0	0
		27 to 45 Degrees	1	96	91	83	75	68	63	53	46	40	35	31	27
			2	53	48	43	40	36	33	28	24	21	18	16	14
			3	41	37	34	31	28	26	22	19	16	14	12	11
	C	7 to 20 Degrees	1	64	57	51	46	42	39	32	28	24	21	18	16
			2	47	42	38	34	31	28	24	20	18	15	14	12
			3	43	38	35	31	28	26	22	19	16	14	12	11
		20 to 27 Degrees	1	82	74	66	60	54	50	42	36	31	27	24	21
			2	56	50	45	41	37	34	29	25	21	19	16	14
			3	0	0	0	0	0	0	0	0	0	0	0	0
		27 to 45 Degrees	1	72	64	58	53	48	44	38	32	28	25	22	19
			2	38	34	31	28	26	23	20	17	15	13	11	10
			3	29	26	24	22	20	18	15	13	11	10	9	8
	D	7 to 20 Degrees	1	53	48	43	39	35	32	27	23	20	17	15	14
			2	39	35	31	29	26	24	20	17	15	13	11	10
			3	36	32	29	26	24	22	18	16	14	12	10	9
		20 to 27 Degrees	1	69	61	55	50	45	42	35	30	26	23	20	18
			2	47	42	38	34	31	28	24	21	18	16	14	12
			3	0	0	0	0	0	0	0	0	0	0	0	0
		27 to 45 Degrees	1	60	54	49	45	41	37	32	27	24	21	18	16
			2	32	29	26	24	21	20	17	14	12	11	10	8
			3	25	22	20	18	17	15	13	11	9	8	7	6
1-10 PSF	B	7 to 20 Degrees	1	84	83	75	67	61	56	47	40	34	30	26	23
			2	68	60	54	49	45	41	34	29	25	22	19	17
			3	62	55	50	45	41	37	31	27	23	20	18	16
		20 to 27 Degrees	1	86	86	86	86	79	72	60	51	44	39	34	30
			2	81	72	65	59	53	49	41	35	30	26	23	21
			3	0	0	0	0	0	0	0	0	0	0	0	0
		27 to 45 Degrees	1	92	91	83	75	68	63	53	46	40	35	31	27
			2	53	48	43	40	36	33	28	24	21	18	16	14
			3	41	37	34	31	28	26	22	19	16	14	12	11
	C	7 to 20 Degrees	1	64	57	51	46	42	39	32	28	24	21	18	16
			2	47	42	38	34	31	28	24	20	18	15	14	12
			3	43	38	35	31	28	26	22	19	16	14	12	11
		20 to 27 Degrees	1	82	74	66	60	54	50	42	36	31	27	24	21
			2	56	50	45	41	37	34	29	25	21	19	16	14
			3	0	0	0	0	0	0	0	0	0	0	0	0
		27 to 45 Degrees	1	72	64	58	53	48	44	38	32	28	25	22	19
			2	38	34	31	28	26	23	20	17	15	13	11	10
			3	29	26	24	22	20	18	15	13	11	10	9	8
	D	7 to 20 Degrees	1	53	48	43	39	35	32	27	23	20	17	15	14
			2	39	35	31	29	26	24	20	17	15	13	11	10
			3	36	32	29	26	24	22	18	16	14	12	10	9
		20 to 27 Degrees	1	69	61	55	50	45	42	35	30	26	23	20	18
			2	47	42	38	34	31	28	24	21	18	16	14	12
			3	0	0	0	0	0	0	0	0	0	0	0	0
		27 to 45 Degrees	1	60	54	49	45	41	37	32	27	24	21	18	16
			2	32	29	26	24	21	20	17	14	12	11	10	8
			3	25	22	20	18	17	15	13	11	9	8	7	6
11-20 PSF	B	7 to 20 Degrees	1	59	59	59	59	59	56	47	40	34	30	26	23
			2	59	59	54	49	45	41	34	29	25	22	19	17
			3	59	55	50	45	41	37	31	27	23	20	18	16
		20 to 27 Degrees	1	61	61	61	61	61	61	60	51	44	39	34	30
			2	61	61	61	59	53	49	41	35	30	26	23	21
			3	0	0	0	0	0	0	0	0	0	0	0	0
		27 to 45 Degrees	1	70	70	70	70	68	63	53	46	40	35	31	27
			2	53	48	43	40	36	33	28	24	21	18	16	14
			3	41	37	34	31	28	26	22	19	16	14	12	11
	C	7 to 20 Degrees	1	59	57	51	46	42	39	32	28	24	21	18	16
			2	47	42	38	34	31	28	24	20	18	15	14	12
			3	43	38	35	31	28	26	22	19	16	14	12	11
		20 to 27 Degrees	1	61	61	61	60	54	50	42	36	31	27	24	21
			2	56	50	45	41	37	34	29	25	21	19	16	14
			3	0	0	0	0	0	0	0	0	0	0	0	0
		27 to 45 Degrees	1	70	64	58	53	48	44	38	32	28	25	22	19
			2	38	34	31	28	26	23	20	17	15	13	11	10
			3	29	26	24	22	20	18	15	13	11	10	9	8
	D	7 to 20 Degrees	1	53	48	43	39	35	32	27	23	20	17	15	14
			2	39	35	31	29	26	24	20	17	15	13	11	10
			3	36	32	29	26	24	22	18	16	14	12	10	9
		20 to 27 Degrees	1	61	61	55	50	45	42	35	30	26	23	20	18
			2	47	42	38	34	31	28	24	21	18	16	14	12
			3	0	0	0	0	0	0	0	0	0	0	0	0
		27 to 45 Degrees	1	60	54	49	45	41	37	32	27	24	21	18	16
			2	32	29	26	24	21	20	17	14	12	11	10	8
			3	25	22	20	18	17	15	13	11	9	8	7	6

Note: See SML "Roof Area" conversion chart and associated ASCE 7-16 Roof Zones on pages 4-10.

Hip Roof RT19

RT-[E] Mount Mini OSB Only Installations Cont.
Maximum Mount Spacing in Inches

Landscape Orientation - ASCE 7-16

Snow Load	Exposure Category	Roof Angle	Roof Area	Basic Wind Speed, V (mph) 95	100	105	110	115	120	130	140	150	160	170	180
21-30 PSF	B	7 to 20 Degrees	1	50	50	50	50	50	50	47	40	34	30	26	23
			2	50	50	50	49	45	41	34	29	25	22	19	17
			3	50	50	50	45	41	37	31	27	23	20	18	16
		20 to 27 Degrees	1	53	53	53	53	53	53	53	51	44	39	34	30
			2	53	53	53	53	53	49	41	35	30	26	23	21
			3	0	0	0	0	0	0	0	0	0	0	0	0
		27 to 45 Degrees	1	62	62	62	62	61	60	53	46	40	35	31	27
			2	53	48	43	40	36	33	28	24	21	18	16	14
			3	41	37	34	31	28	26	22	19	16	14	12	11
	C	7 to 20 Degrees	1	50	50	50	46	42	39	32	28	24	21	18	16
			2	47	42	38	34	31	28	24	20	18	15	14	12
			3	43	38	35	31	28	26	22	19	16	14	12	11
		20 to 27 Degrees	1	53	53	53	53	52	50	42	36	31	27	24	21
			2	53	50	45	41	37	34	29	25	21	19	16	14
			3	0	0	0	0	0	0	0	0	0	0	0	0
		27 to 45 Degrees	1	62	60	58	53	48	44	38	32	28	25	22	19
			2	38	34	31	28	26	23	20	17	15	13	11	10
			3	29	26	24	22	20	18	15	13	11	10	9	8
	D	7 to 20 Degrees	1	50	48	43	39	35	32	27	23	20	17	15	14
			2	39	35	31	29	26	24	20	17	15	13	11	10
			3	36	32	29	26	24	22	18	16	14	12	10	9
		20 to 27 Degrees	1	53	53	52	50	45	42	35	30	26	23	20	18
			2	47	42	38	34	31	28	24	21	18	16	14	12
			3	0	0	0	0	0	0	0	0	0	0	0	0
		27 to 45 Degrees	1	59	54	49	45	41	37	32	27	24	21	18	16
			2	32	29	26	24	21	20	17	14	12	11	10	8
			3	25	22	20	18	17	15	13	11	9	8	7	6
31-40 PSF	B	7 to 20 Degrees	1	39	39	39	39	39	39	39	39	34	30	26	23
			2	39	39	39	39	39	39	34	29	25	22	19	17
			3	39	39	39	39	39	37	31	27	23	20	18	16
		20 to 27 Degrees	1	41	41	41	41	41	41	41	41	41	39	34	30
			2	41	41	41	41	41	41	41	35	30	26	23	21
			3	0	0	0	0	0	0	0	0	0	0	0	0
		27 to 45 Degrees	1	52	52	52	52	52	51	49	46	40	35	31	27
			2	52	48	43	40	36	33	28	24	21	18	16	14
			3	41	37	34	31	28	26	22	19	16	14	12	11
	C	7 to 20 Degrees	1	39	39	39	39	39	39	32	28	24	21	18	16
			2	39	39	38	34	31	28	24	20	18	15	14	12
			3	39	38	35	31	28	26	22	19	16	14	12	11
		20 to 27 Degrees	1	41	41	41	41	41	41	41	36	31	27	24	21
			2	41	41	41	41	37	34	29	25	21	19	16	14
			3	0	0	0	0	0	0	0	0	0	0	0	0
		27 to 45 Degrees	1	52	51	50	49	48	44	38	32	28	25	22	19
			2	38	34	31	28	26	23	20	17	15	13	11	10
			3	29	26	24	22	20	18	15	13	11	10	9	8
	D	7 to 20 Degrees	1	39	39	39	39	35	32	27	23	20	17	15	14
			2	39	35	31	29	26	24	20	17	15	13	11	10
			3	36	32	29	26	24	22	18	16	14	12	10	9
		20 to 27 Degrees	1	41	41	41	41	41	41	35	30	26	23	20	18
			2	41	41	38	34	31	28	24	21	18	16	14	12
			3	0	0	0	0	0	0	0	0	0	0	0	0
		27 to 45 Degrees	1	50	49	48	45	41	37	32	27	24	21	18	16
			2	32	29	26	24	21	20	17	14	12	11	10	8
			3	25	22	20	18	17	15	13	11	9	8	7	6
41-50 PSF	B	7 to 20 Degrees	1	32	32	32	32	32	32	32	32	32	30	26	23
			2	32	32	32	32	32	32	32	29	25	22	19	17
			3	32	32	32	32	32	32	31	27	23	20	18	16
		20 to 27 Degrees	1	34	34	34	34	34	34	34	34	34	34	34	30
			2	34	34	34	34	34	34	34	34	30	26	23	21
			3	0	0	0	0	0	0	0	0	0	0	0	0
		27 to 45 Degrees	1	43	43	43	43	43	43	43	41	40	35	31	27
			2	43	43	43	40	36	33	28	24	21	18	16	14
			3	41	37	34	31	28	26	22	19	16	14	12	11
	C	7 to 20 Degrees	1	32	32	32	32	32	32	32	28	24	21	18	16
			2	32	32	32	32	31	28	24	20	18	15	14	12
			3	32	32	32	31	28	26	22	19	16	14	12	11
		20 to 27 Degrees	1	34	34	34	34	34	34	34	34	31	27	24	21
			2	34	34	34	34	34	34	29	25	21	19	16	14
			3	0	0	0	0	0	0	0	0	0	0	0	0
		27 to 45 Degrees	1	43	43	43	43	42	41	38	32	28	25	22	19
			2	38	34	31	28	26	23	20	17	15	13	11	10
			3	29	26	24	22	20	18	15	13	11	10	9	8
	D	7 to 20 Degrees	1	32	32	32	32	32	32	27	23	20	17	15	14
			2	32	32	31	29	26	24	20	17	15	13	11	10
			3	32	32	29	26	24	22	18	16	14	12	10	9
		20 to 27 Degrees	1	34	34	34	34	34	34	34	30	26	23	20	18
			2	34	34	34	34	31	28	24	21	18	16	14	12
			3	0	0	0	0	0	0	0	0	0	0	0	0
		27 to 45 Degrees	1	43	43	42	41	40	37	32	27	24	21	18	16
			2	32	29	26	24	21	20	17	14	12	11	10	8
			3	25	22	20	18	17	15	13	11	9	8	7	6

Note: See SML "Roof Area" conversion chart and associated ASCE 7-16 Roof Zones on pages 4-10.

Hip Roof RT19	RT-[E] Mount Mini OSB Only Installations Cont. Maximum Mount Spacing in Inches														
Landscape Orientation - ASCE 7-16															
Snow Load	Exposure Category	Roof Angle	Roof Area	Basic Wind Speed, V (mph)											
				95	100	105	110	115	120	130	140	150	160	170	180
51-60 PSF	B	7 to 20 Degrees	1	27	27	0	27	27	27	27	27	27	27	26	23
			2	27	27	0	27	27	27	27	27	25	22	19	17
			3	27	27	0	27	27	27	27	27	23	20	18	16
		20 to 27 Degrees	1	29	29	29	29	29	29	29	29	29	29	29	29
			2	29	29	29	29	29	29	29	29	29	26	23	21
			3	0	0	0	0	0	0	0	0	0	0	0	0
		27 to 45 Degrees	1	37	37	37	37	37	37	37	37	36	34	31	27
			2	37	37	37	37	36	33	28	24	21	18	16	14
			3	37	37	34	31	28	26	22	19	16	14	12	11
	C	7 to 20 Degrees	1	27	27	27	27	27	27	27	27	24	21	18	16
			2	27	27	27	27	27	27	24	20	18	15	14	12
			3	27	27	27	27	27	26	22	19	16	14	12	11
		20 to 27 Degrees	1	29	29	29	29	29	29	29	29	29	27	24	21
			2	29	29	29	29	29	29	29	25	21	19	16	14
			3	0	0	0	0	0	0	0	0	0	0	0	0
		27 to 45 Degrees	1	37	37	37	37	37	36	35	32	28	25	22	19
			2	37	34	31	28	26	23	20	17	15	13	11	10
			3	29	26	24	22	20	18	15	13	11	10	9	8
	D	7 to 20 Degrees	1	27	27	27	27	27	27	27	23	20	17	15	14
			2	27	27	27	27	26	24	20	17	15	13	11	10
			3	27	27	27	26	24	22	18	16	14	12	10	9
		20 to 27 Degrees	1	29	29	29	29	29	29	29	29	26	23	20	18
			2	29	29	29	29	29	28	24	21	18	16	14	12
			3	0	0	0	0	0	0	0	0	0	0	0	0
		27 to 45 Degrees	1	37	37	37	36	36	35	32	27	24	21	18	16
			2	32	29	26	24	21	20	17	14	12	11	10	8
			3	25	22	20	18	17	15	13	11	9	8	7	6
61-70 PSF	B	7 to 20 Degrees	1	23	23	23	23	23	23	23	23	23	23	23	23
			2	23	23	23	23	23	23	23	23	23	22	19	17
			3	23	23	23	23	23	23	23	23	23	20	18	16
		20 to 27 Degrees	1	25	25	25	25	25	25	25	25	25	25	25	25
			2	25	25	25	25	25	25	25	25	25	25	23	21
			3	0	0	0	0	0	0	0	0	0	0	0	0
		27 to 45 Degrees	1	32	32	32	32	32	32	32	32	32	31	30	27
			2	32	32	32	32	32	32	28	24	21	18	16	14
			3	32	32	32	31	28	26	22	19	16	14	12	11
	C	7 to 20 Degrees	1	23	23	23	23	23	23	23	23	23	21	18	16
			2	23	23	23	23	23	23	23	20	18	15	14	12
			3	23	23	23	23	23	23	22	19	16	14	12	11
		20 to 27 Degrees	1	25	25	25	25	25	25	25	25	25	25	24	21
			2	25	25	25	25	25	25	25	25	21	19	16	14
			3	0	0	0	0	0	0	0	0	0	0	0	0
		27 to 45 Degrees	1	32	32	32	32	32	32	32	31	28	25	22	19
			2	32	32	31	28	26	23	20	17	15	13	11	10
			3	29	26	24	22	20	18	15	13	11	10	9	8
	D	7 to 20 Degrees	1	23	23	23	23	23	23	23	23	20	17	15	14
			2	23	23	23	23	23	23	20	17	15	13	11	10
			3	23	23	23	23	23	22	18	16	14	12	10	9
		20 to 27 Degrees	1	25	25	25	25	25	25	25	25	25	23	20	18
			2	25	25	25	25	25	25	24	21	18	16	14	12
			3	0	0	0	0	0	0	0	0	0	0	0	0
		27 to 45 Degrees	1	32	32	32	32	32	32	30	27	24	21	18	16
			2	32	29	26	24	21	20	17	14	12	11	10	8
			3	25	22	20	18	17	15	13	11	9	8	7	6

Note: See SML "Roof Area" conversion chart and associated ASCE 7-16 Roof Zones on pages 4-10.

Table Notes for Tables RT1 to RT19 – Tabulated values are based on the following criteria:

1. Building mean roof height = 30 ft maximum.
2. Risk Category = II.
3. Solar panel maximum allowable tributary (trib.) widths = 40 inches for Landscape tables, 68 inches for Portrait 60 Cell tables & 77.5 inches for Portrait 72 Cell tables.
   a. Please note that other PV panels may be used, eg. 90 cell panels, provided they do not exceed the maximum allowable tributary width for the given table used for installation.
   b. It is acceptable to reduce the maximum span shown in the tables for larger tributary widths by the following equation: "New Max. Span" = "Table Max. Span" x "Table Trib. Width" / "New Trib. Width"; eg. If "New Trib.Width" = 44 inches, you can use the Landscape Tables (40 inch Trib. Width), but you will need to reduce the span as follows: "New Max. Span" = "Table Max. Span" x "40 inches" / "44 inches". So if the "Table Max. Span" = 96 inches the "New Max. Span" = "96 inches" x "40 inches" / "44 inches" = "87 inches".
4. Solar panel & rail dead load = approximately 4.0 psf.
5. ASCE 7-16.
6. γ_E = edge array factor, has been taken as 1.5.
7. γ_a = solar panel pressure equalization factor, has been taken as 0.6 assuming a min. array area of 31.5 sq. ft.
8. OSB shall be 24/16 APA rated sheathing minimum (7/16" thick).
9. Plywood shall be 32/16 APA rated sheathing minimum (15/32" thick).
10. Sheathing shall be free of defects including, but not limited to water damage and delamination.
11. Roof rafters or trusses spaced at 24" on center maximum, and must be evaluated for structural integrity and capacity as required by the governing jurisdiction.
12. PV panels must be supported per the manufacturer's required orientation, location and/or spacing.
13. The mounts may be installed through a maximum of 2 layers of composite asphalt roof shingles or maximum 20 gage metal decking provided the metal is predrilled as wood screws are not designed to penetrate the metal decking.
14. Maximum height from bottom of base mount to L-Foot attachment 3 ¼". Ref. Exhibit 'A' detail 1.

Our analysis assumes that the connections and associated hardware are installed in a workmanlike manner in accordance with the RT-Mini Mount Installation Manual and generally accepted standards of construction practice. It is the responsibility of the contractor to verify that the strength of the roof framing meets the minimum properties used in the tests and can safely support the maximum imposed loads stated within this document. Starling Madison Lofquist, Inc. and Roof Tech assume no liability beyond what is specifically shown in this letter. Additional information is available at the Roof Tech web site, http://www.roof-tech.us/.

Please feel free to contact me at your convenience if you have any questions.

Respectfully yours,

JESSE LIGHT REGISTERED PE11800413 STATE OF INDIANA PROFESSIONAL ENGINEER
7-28-2022
EXP. 7-31-2024

Jesse Light, S.E., P.E.
Principal (VP) / Sr. Structural Engineer

Rusmir Begic, P.E., M.S.E.
Licensed Professional Engineer

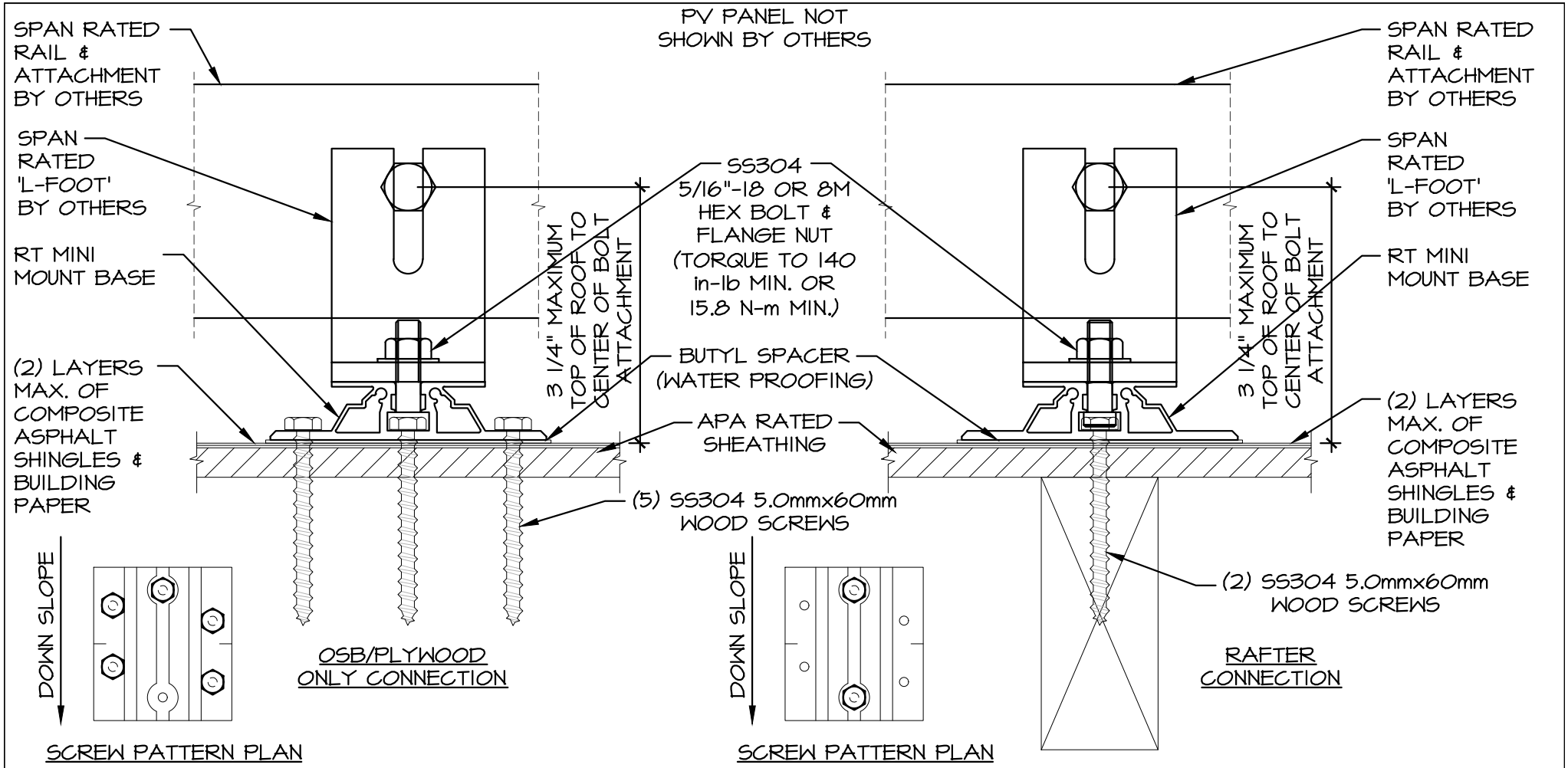

1 'RAIL OPTION' - RAIL AND 'L-FOOT' ORIENTATION

SCALE: N.T.S.

Starling Madison Lofquist, Inc.
3600 E University Dr, Suite 1400
Phoenix, Arizona 85034
(602) 438-2500
fax. (602) 438-2505

Consulting Structural and Forensic Engineers

DRAWN BY:	J.S.	DATE:	6-9-22
DESIGNED BY:	J.L.	JOB NO:	471-22

ROOF TECH
RT-MINI MOUNT + RAIL
STRUCTURAL ANALYSIS

ROOF TECH, INC.
10620 TREENA ST., SUITE 230
SAN DIEGO, CA 92131

EXHIBIT A
1 OF 4

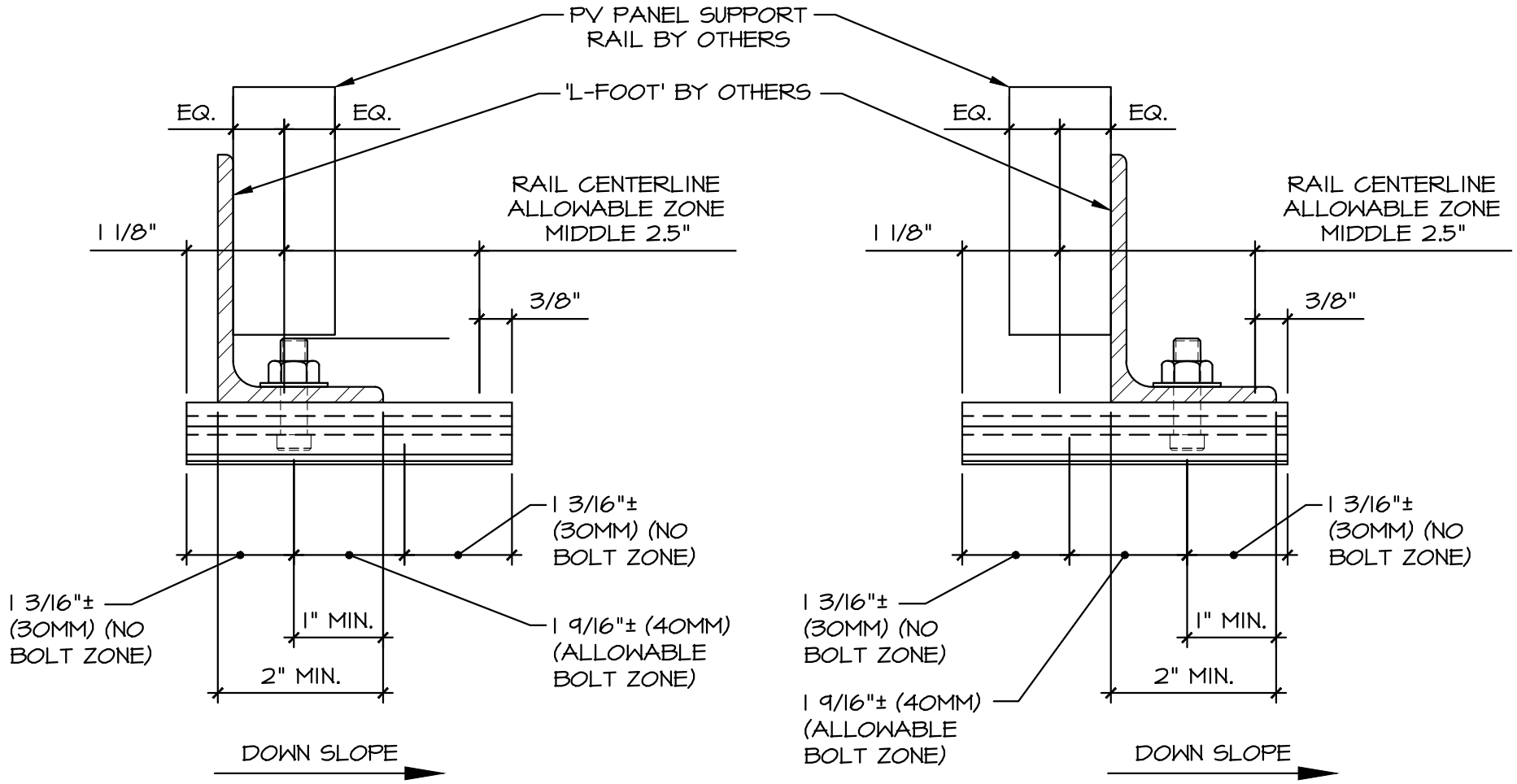

2 'RAIL OPTION' - RAIL AND 'L-FOOT' ORIENTATION

SCALE: N.T.S.

Starling Madison Lofquist, Inc.
3600 E University Dr, Suite A-1400
Phoenix, Arizona 85034
(602) 438-2500
fax. (602) 438-2505

Consulting Structural and Forensic Engineers

DRAWN BY:	J.S.	DATE:	6-9-22
DESIGNED BY:	J.L.	JOB NO:	471-22

ROOF TECH
RT-MINI MOUNT + RAIL
STRUCTURAL ANALYSIS

ROOF TECH, INC.
10620 TREENA ST., SUITE 230
SAN DIEGO, CA 92131

NOTE: RT MINI MOUNT BASE TO BE ORIENTED WITH LONG DIRECTION DOWN ROOF SLOPE AS SHOWN. SKIP LOAD ROOF WHERE POSSIBLE TO EVENLY DISTRIBUTE LOAD TO ROOF FRAMING.
THERMAL EXPANSION RAIL SPLICES AT MANUFACTURER'S RECOMMENDATIONS OR AT 14 FOOT O.C. MAXIMUM.

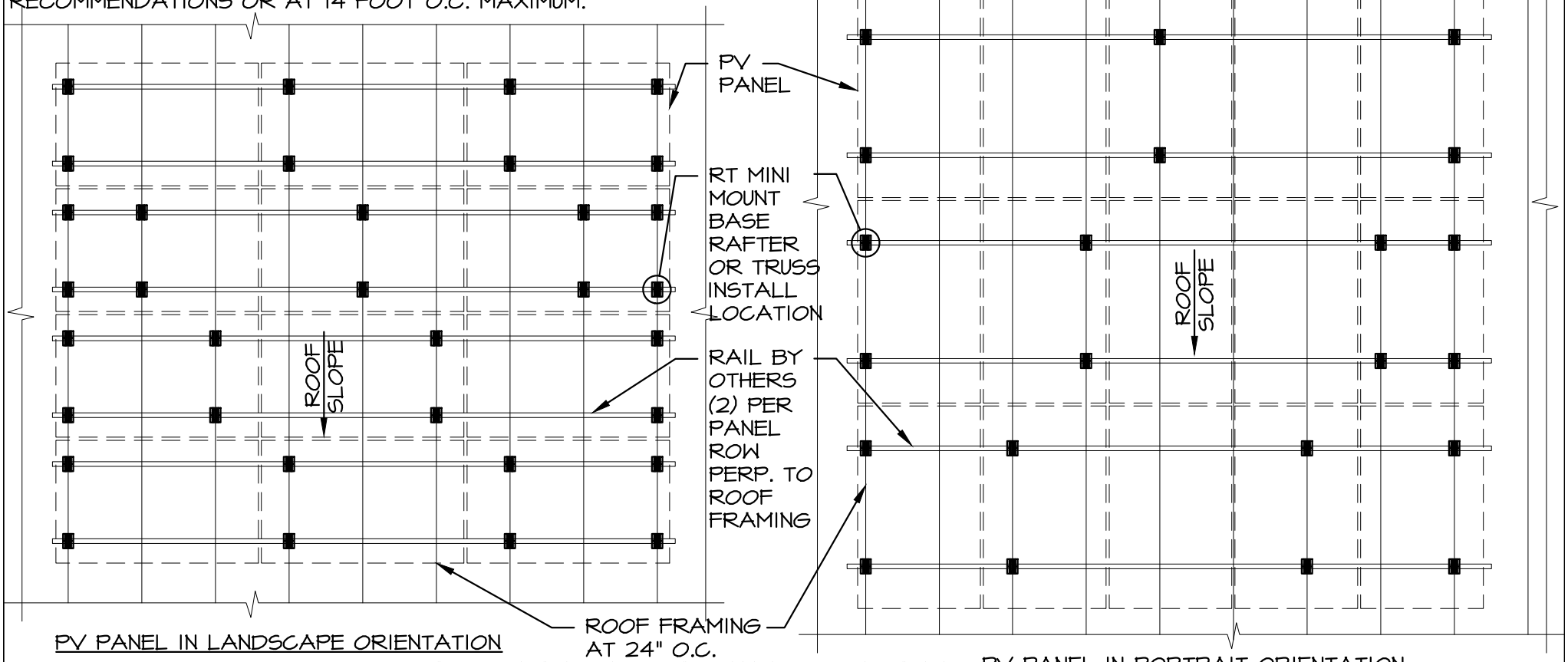

PV PANEL IN LANDSCAPE ORIENTATION

PV PANEL IN PORTRAIT ORIENTATION

3 PARTIAL FRAMING PLAN (RAFTER INSTALLATION)

SCALE: N.T.S.

Starling Madison Lofquist, Inc.
3600 E University Dr, Suite A-1400
Phoenix, Arizona 85034
(602) 438-2500
fax. (602) 438-2505

Consulting Structural and Forensic Engineers

DRAWN BY:	J.S.	DATE:	6-9-22
DESIGNED BY:	J.L.	JOB NO:	471-22

ROOF TECH
RT-MINI MOUNT + RAIL
STRUCTURAL ANALYSIS

ROOF TECH, INC.
10620 TREENA ST., SUITE 230
SAN DIEGO, CA 92131

EXHIBIT A
3 OF 4

NOTE: RT MINI MOUNT BASE TO BE ORIENTED WITH LONG DIRECTION DOWN ROOF SLOPE AS SHOWN. SKIP LOAD ROOF WHERE POSSIBLE TO EVENLY DISTRIBUTE LOAD TO ROOF FRAMING.
THERMAL EXPANSION RAIL SPLICES AT MANUFACTURER'S RECOMMENDATIONS OR AT 14 FOOT O.C. MAXIMUM.

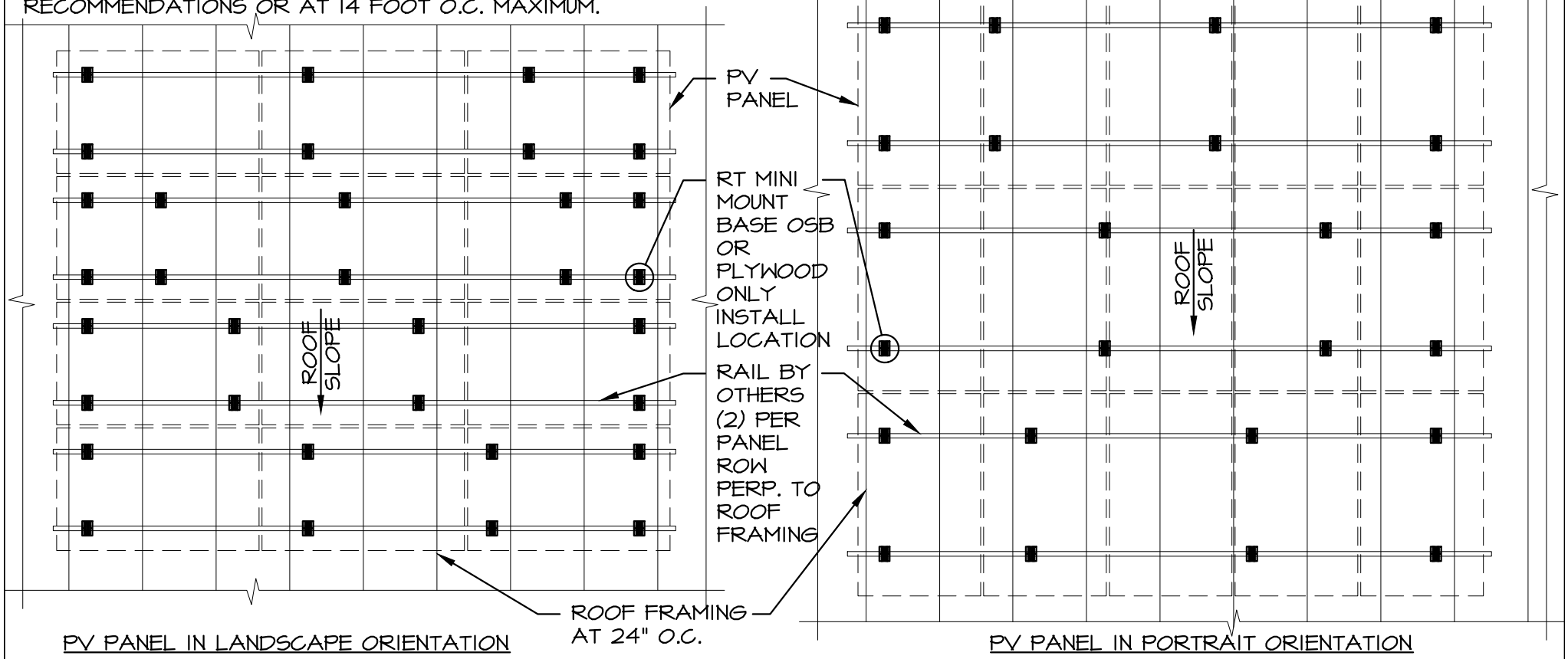

PARTIAL FRAMING PLAN (OSB/PLYWOOD ONLY INSTALLATION)

4

SCALE: N.T.S.

Starling Madison Lofquist, Inc.
3600 E University Dr, Suite A-1400
Phoenix, Arizona 85034
(602) 438-2500
fax. (602) 438-2505

Consulting Structural and Forensic Engineers

DRAWN BY:	J.S.	DATE:	6-9-22
DESIGNED BY:	D.H.	JOB NO:	471-22

ROOF TECH
RT-MINI MOUNT + RAIL
STRUCTURAL ANALYSIS

ROOF TECH, INC.
10620 TREENA ST., SUITE 230
SAN DIEGO, CA 92131

EXHIBIT A
4 OF 4

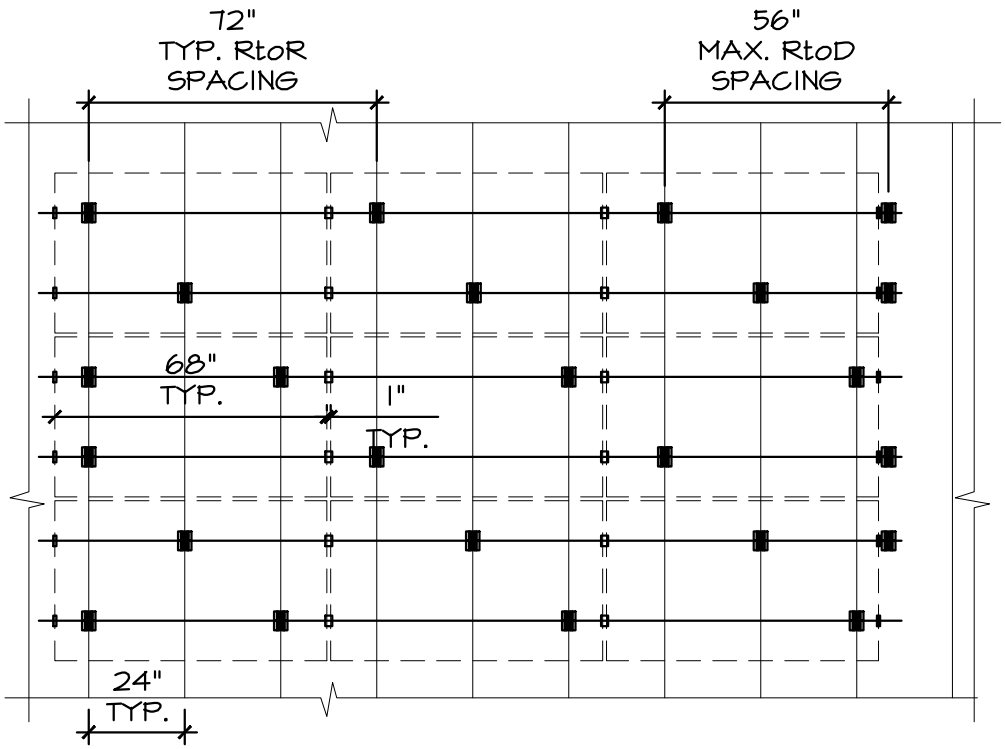

LANDSCAPE EXAMPLE:

DESIGN CRITERIA:

- ASCE 7-16
- 50 PSF GROUND SNOW LOAD
- 110 MPH WIND SPEED
- 7-27 DEGREE ROOF ANGLE
- WIND EXPOSURE 'C'
- ROOF ZONE 2
- 60 OR 72 CELL PV PANELS (60 CELL SHOWN)
- RAFTER AND PLYWOOD DECKING ONLY
  COMBINED INSTALLATION
  NOTE: SIMILAR PROCEDURE FOR
  OSB DECKING ONLY

RAFTER-TO-RAFTER (RtoR) = 79 (in)
DECKING-TO-DECKING (DtoD) = 32 (in)

RtoD = RAFTER-TO-DECKING = [(RtoR)+(DtoD)]/2

RtoD = [79in+32in]/2=56in MAX.

PLEASE NOTE: CHECK WITH PV PANEL MANUFACTURER FOR ALLOWABLE SUPPORT LOCATIONS FOR THE PROJECT SPECIFIC DESIGN LOADS. SUPPORT LOCATIONS SHOWN MAY NOT BE ALLOWED FOR ALL PV PANELS.

1 PARTIAL FRAMING PLAN AND EXAMPLE CALCULATION (COMBINED RAFTER-TO-DECKING ONLY LANDSCAPE INSTALL)

SCALE: 1/4"=1'-0"

Starling Madison Lofquist, Inc.
3600 E University Dr, Suite A-1400
Phoenix, Arizona 85034
(602) 438-2500
fax. (602) 438-2505

Consulting Structural and Forensic Engineers

DRAWN BY:	J.L.	DATE:	6-9-22
DESIGNED BY:	J.L.	JOB NO:	471-22

ROOF TECH
RT-MINI MOUNT + RAIL
STRUCTURAL ANALYSIS

ROOF TECH, INC.
10620 TREENA ST., SUITE 230
SAN DIEGO, CA 92131

EXHIBIT B
1 OF 2

PORTRAIT EXAMPLE:

DESIGN CRITERIA:

- ASCE 7-16
- 50 PSF GROUND SNOW LOAD
- 110 MPH WIND SPEED
- 7-27 DEGREE ROOF ANGLE
- WIND EXPOSURE 'C'
- ROOF ZONE 1
- 72 CELL PV PANEL
- RAFTER AND PLYWOOD DECKING ONLY
  COMBINED INSTALLATION
  NOTE: SIMILAR PROCEDURE FOR
  OSB DECKING ONLY

RAFTER-TO-RAFTER (RtoR) = 62 (in)
DECKING-TO-DECKING (DtoD) = 25 (in)

RtoD = RAFTER-TO-DECKING = [(RtoR)+(DtoD)]/2

RtoD = [62in+25in]/2=44in MAX.

PLEASE NOTE: CHECK WITH PV PANEL MANUFACTURER FOR ALLOWABLE SUPPORT LOCATIONS FOR THE PROJECT SPECIFIC DESIGN LOADS. SUPPORT LOCATIONS SHOWN MAY NOT BE ALLOWED FOR ALL PV PANELS.

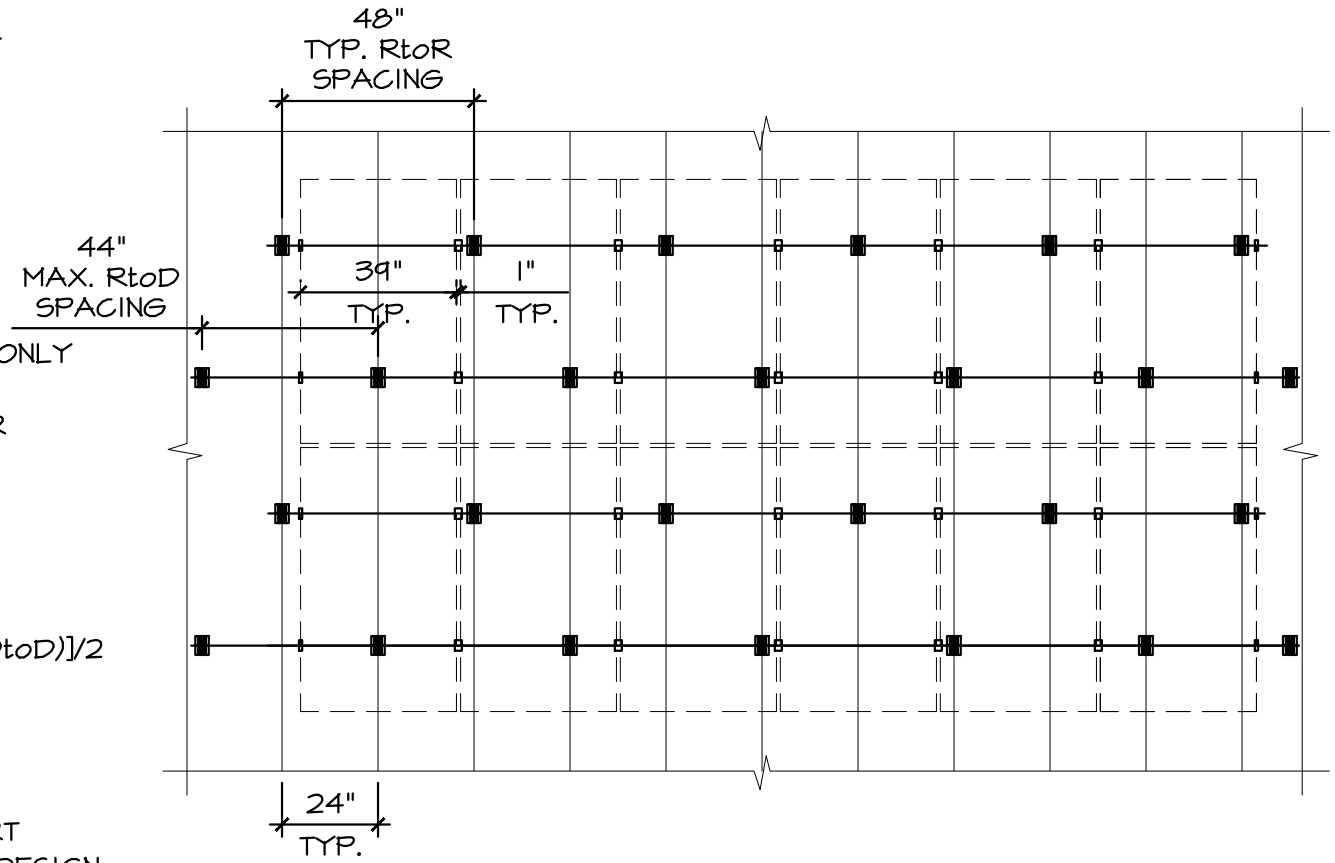

2 PARTIAL FRAMING PLAN AND EXAMPLE CALCULATION (COMBINED RAFTER-TO-DECKING ONLY PORTRAIT INSTALL)

SCALE: 1/4"=1'-0"

Consulting Structural and Forensic Engineers

Starling Madison Lofquist, Inc.
3600 E University Dr, Suite A-1400
Phoenix, Arizona 85034
(602) 438-2500
fax. (602) 438-2505

DRAWN BY:	J.L.	DATE:	6-9-22
DESIGNED BY:	J.L.	JOB NO:	471-22

ROOF TECH
RT-MINI MOUNT + RAIL
STRUCTURAL ANALYSIS

ROOF TECH, INC.
10620 TREENA ST., SUITE 230
SAN DIEGO, CA 92131

EXHIBIT B
2 OF 2