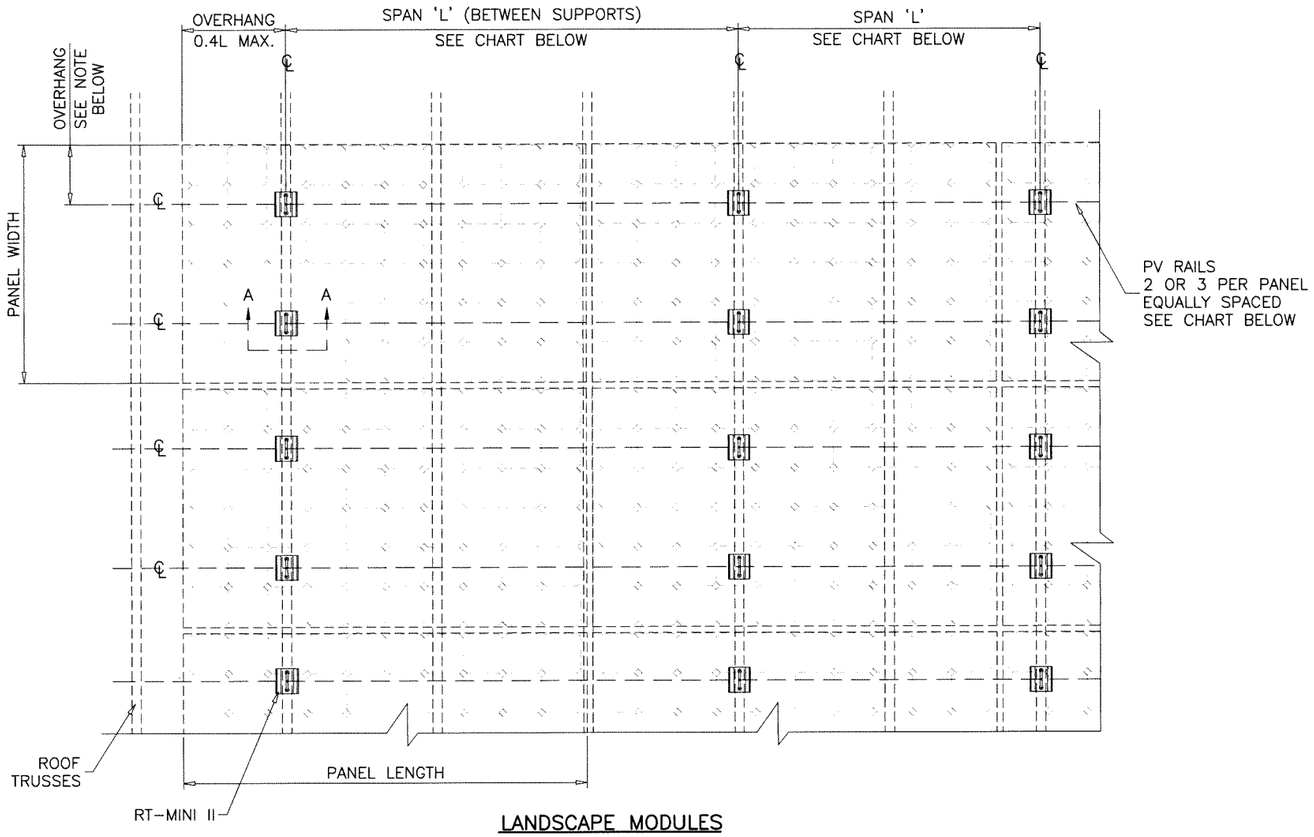

LANDSCAPE MODULES

PLAN VIEW

NOTE:
OVERHANG AS PER PANEL MANUFACTURER'S INSTRUCTIONS.
SHOULD BE EQUAL ON BOTH SIDES OF PANELS.

DESIGN LOAD CAPACITY – PSF (LANDSCAPE MODULES)
UP TO 80" PANEL LENGTHS

NUMBER OF RAILS	SPAN 'L'	FLAT ROOFS		ROOF SLOPES UP TO 7°		ROOF SLOPES 8° TO 20°		ROOF SLOPES 21° TO 27°		ROOF SLOPES 28° TO 45°	
		ANCHOR TYPE 'A'	ANCHOR TYPE 'B'	ANCHOR TYPE 'A'	ANCHOR TYPE 'B'	ANCHOR TYPE 'A'	ANCHOR TYPE 'B'	ANCHOR TYPE 'A'	ANCHOR TYPE 'B'	ANCHOR TYPE 'A'	ANCHOR TYPE 'B'
2	16"	230.3	247.8	229.6	247.2	228.2	245.8	227.3	245.0	225.2	243.0
	24"	154.9	166.6	154.2	165.9	152.7	164.5	151.9	163.8	149.7	161.7
	32"	117.2	125.9	116.5	125.3	115.0	123.9	114.2	123.1	112.0	121.1
	48"	79.4	85.3	78.7	84.6	77.3	83.3	76.5	82.5	74.3	80.4
	64"	60.6	65.0	59.9	64.3	58.4	62.9	57.6	62.2	55.4	60.1
	72"	54.3	58.2	53.6	57.5	52.1	56.2	51.3	55.4	49.1	53.3
3	16"	250.0	250.0	250.0	250.0	250.0	250.0	250.0	250.0	250.0	250.0
	24"	209.3	225.2	208.6	224.5	207.1	223.1	206.3	222.4	204.1	220.3
	32"	158.0	169.9	157.3	169.2	155.8	167.9	155.0	167.1	152.8	165.0
	48"	106.6	114.6	105.9	113.9	104.5	112.6	103.7	111.8	101.5	109.7
	64"	81.0	86.9	80.3	86.3	78.8	84.9	78.0	84.1	75.8	82.1
	72"	72.4	77.7	71.7	77.1	70.3	75.7	69.4	74.9	67.3	72.9

LOADS SHOWN IN CHARTS ABOVE ARE FOR PANEL WIDTHS UP TO 40"
FOR WIDER PANEL WIDTHS (41" TO 48"), DETERMINE DESIGN LOADS AS FOLLOWS

$$\text{DESIGN LOAD} = \frac{\text{LOAD FROM CHART X 40}}{\text{NEW PANEL WIDTH}}$$

RT-MINI II ROOF TOP PV MOUNTING SYSTEM

THIS PRODUCT HAS BEEN DESIGNED AND TESTED TO COMPLY WITH THE REQUIREMENTS OF THE 2020 (7TH EDITION) FLORIDA BUILDING CODE INCLUDING HIGH VELOCITY HURRICANE ZONE (HVHZ).

THIS PRODUCT APPROVAL IS FOR THE ROOF TOP PV MOUNTING SYSTEM AS SHOWN ON THESE APPROVED DRAWINGS.
ROOF DETAILS, UPLIFT, SLOPE, ROOF TRUSSES AND OTHER ELEMENTS SHALL BE DESIGNED BY A FLORIDA REGISTERED ENGINEER AND REVIEWED BY THE STRUCTURAL PLANS EXAMINER OF THE CORRESPONDING BUILDING DEPARTMENT.
CONDITIONS NOT SHOWN IN THIS DRAWING ARE TO BE ANALYZED SEPARATELY, AND TO BE REVIEWED BY BUILDING OFFICIAL.

INSTALLATION OF PV PANEL ACCESSORIES SHALL BE DONE IN ACCORDANCE WITH THE CURRENT EDITION OF FLORIDA BUILDING CODE AND THE MANUFACTURER'S INSTALLATION INSTRUCTIONS.

ANCHORS SHALL BE CORROSION RESISTANT, SPACED AS SHOWN ON DETAILS AND INSTALLED PER MANUF'S INSTRUCTIONS. SPECIFIED EMBEDMENT TO BASE MATERIAL SHALL BE BEYOND ROOF COVERING.

DESIGN LOADS SHOWN ARE BASED ON 'ALLOWABLE STRESS DESIGN (ASD)'.

SOLAR PANELS TO BE INSTALLED PARALLEL TO THE ROOF SURFACE WITH A TOLERANCE OF 2 DEGREES.

PV PANELS NOT PART OF THIS APPROVAL.
FOR PANEL DETAILS, GENERAL NOTES, COMPONENT SIZES, PANEL RAIL CONNECTION TO RT-MINI II AND INSTALLATION REQUIREMENTS/LIMITATIONS SEE CORRESPONDING FLA. APPROVAL DWGS.

A- CONTRACTOR TO BE RESPONSIBLE FOR THE SELECTION, PURCHASE AND INSTALLATION OF THIS PRODUCT BASED ON THIS PRODUCT EVALUATION PROVIDED HE/SHE DOES NOT DEVIATE FROM THE CONDITIONS DETAILED ON THIS DOCUMENT.

B- THIS PRODUCT EVALUATION DOCUMENT WILL BE CONSIDERED INVALID IF ALTERED BY ANY MEANS.

C- SITE SPECIFIC PROJECTS SHALL BE PREPARED BY A FLORIDA REGISTERED ENGINEER OR ARCHITECT WHICH WILL BECOME THE ENGINEER OF RECORD (E.O.R.) FOR THE PROJECT AND WHO WILL BE RESPONSIBLE FOR THE PROPER USE OF THE P.E.D. ENGINEER OF RECORD, ACTING AS A DELEGATED ENGINEER TO THE P.E.D. ENGINEER SHALL SUBMIT TO THIS LATTER THE SITE SPECIFIC DRAWINGS FOR REVIEW.

D- THIS P.E.D. SHALL BEAR THE DATE AND ORIGINAL SEAL AND SIGNATURE OF THE PROFESSIONAL ENGINEER OF RECORD THAT PREPARED IT.

4/20/2021

FL #38617

JALAL FAROOQ
LICENSE
No. 81223
STATE OF FLORIDA
PROFESSIONAL ENGINEER

AL-FAROOQ CORPORATION
ENGINEERS & PRODUCT DEVELOPMENT
9360 SUNSET DRIVE, SUITE 220
MIAMI, FLORIDA 33173 (C.A.N. 3538)
TEL. (305) 264-8100 FAX. (305) 262-6978

SOLAR-RACK\21-27F-RT

RT-MINI II ROOF TOP PV MOUNTING SYSTEM

Roof Tech Inc.
10620 Treena Street Suite 230
San Diego, CA. 92131
Phone: (858) 935-6064 Fax:

revisions:			
no	date	by	description

date: 03-23-21
scale: 1/2"=1'-0"
dr. by: TARIQ
chk. by:

drawing no.
21-27F

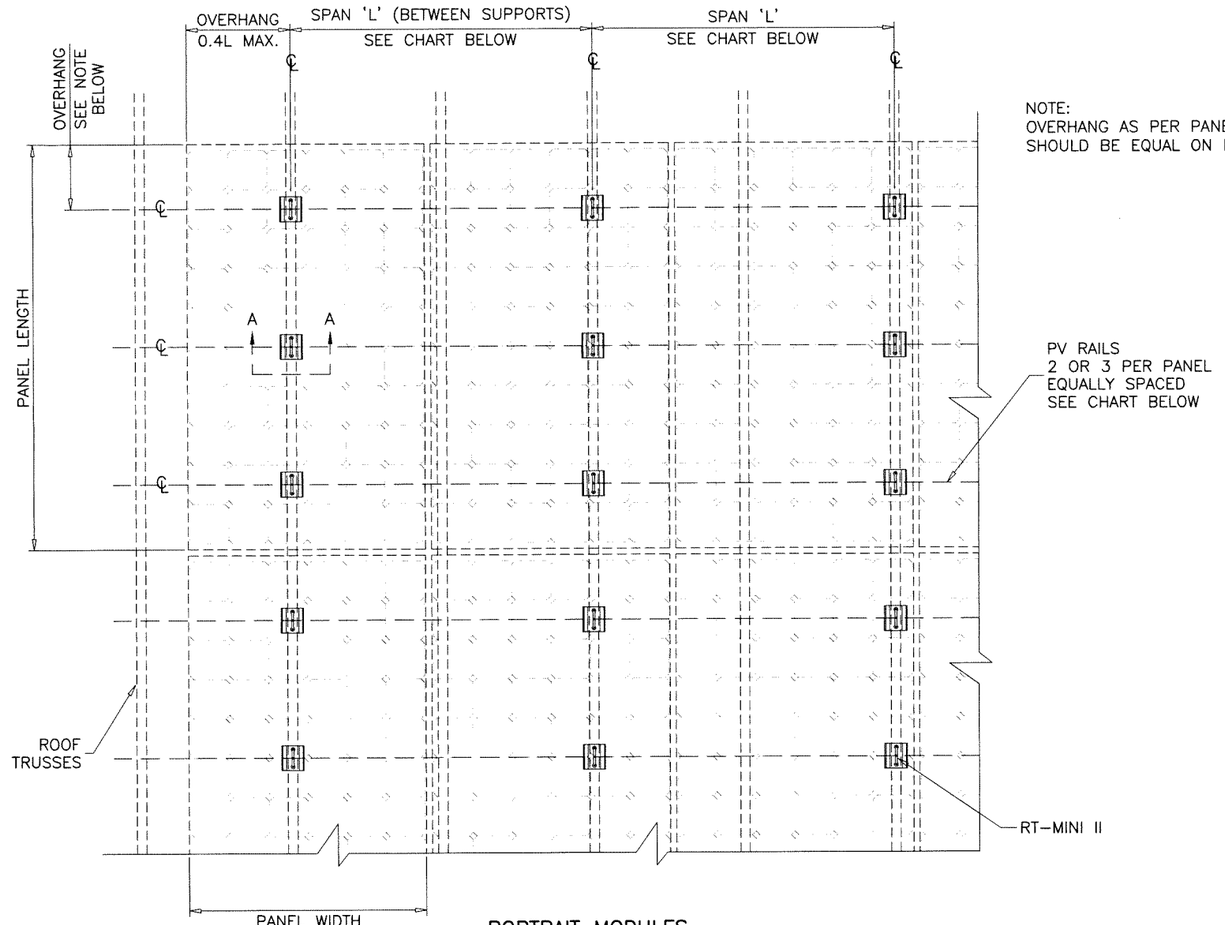

NOTE:
OVERHANG AS PER PANEL MANUFACTURER'S INSTRUCTIONS.
SHOULD BE EQUAL ON BOTH SIDES OF PANELS.

PORTRAIT MODULES
PLAN VIEW

DESIGN LOAD CAPACITY – PSF (PORTRAIT MODULES)
UP TO 68" PANEL LENGTHS

NUMBER OF RAILS	SPAN 'L'	FLAT ROOFS		ROOF SLOPES UP TO 7°		ROOF SLOPES 8° TO 20°		ROOF SLOPES 21° TO 27°		ROOF SLOPES 28° TO 45°	
		ANCHOR TYPE 'A'	ANCHOR TYPE 'B'	ANCHOR TYPE 'A'	ANCHOR TYPE 'B'	ANCHOR TYPE 'A'	ANCHOR TYPE 'B'	ANCHOR TYPE 'A'	ANCHOR TYPE 'B'	ANCHOR TYPE 'A'	ANCHOR TYPE 'B'
2	16"	137.1	147.4	136.4	146.8	135.0	145.4	134.1	144.6	132.0	142.6
	24"	92.8	99.6	92.0	99.0	90.6	97.6	89.8	96.8	87.6	94.8
	32"	70.6	75.7	69.9	75.1	68.4	73.7	67.6	72.9	65.4	70.9
	48"	48.4	51.8	47.7	51.1	46.2	49.8	45.4	49.0	43.2	47.0
	64"	37.3	39.9	36.6	39.2	35.1	37.8	34.3	37.1	32.1	35.0
	72"	33.6	35.9	32.9	35.2	31.4	33.8	30.6	33.1	28.4	31.0
3	16"	175.5	188.7	174.8	188.1	173.3	186.7	172.5	185.9	170.3	183.9
	24"	118.3	127.2	117.6	126.5	116.1	125.1	115.3	124.3	113.2	122.3
	32"	89.7	96.4	89.0	95.7	87.6	94.3	86.7	93.6	84.6	91.5
	48"	61.2	65.6	60.4	64.9	59.0	63.6	58.2	62.8	56.0	60.7
	64"	46.9	50.2	46.2	49.5	44.7	48.2	43.9	47.4	41.7	45.3
	72"	42.1	45.1	41.4	44.4	39.9	43.0	39.1	42.2	36.9	40.2

LOADS SHOWN IN CHARTS ABOVE ARE FOR PANEL LENGTHS UP TO 68"
FOR SHORTER PANEL LENGHTS, DETERMINE DESIGN LOADS AS FOLLOWS

$$\text{DESIGN LOAD} = \frac{\text{LOAD FROM CHART X 68}}{\text{NEW PANEL LENGTH}}$$

DESIGN LOAD CAPACITY – PSF (PORTRAIT MODULES)
UP TO 80" PANEL LENGTHS

NUMBER OF RAILS	SPAN 'L'	FLAT ROOFS		ROOF SLOPES UP TO 7°		ROOF SLOPES 8° TO 20°		ROOF SLOPES 21° TO 27°		ROOF SLOPES 28° TO 45°	
		ANCHOR TYPE 'A'	ANCHOR TYPE 'B'	ANCHOR TYPE 'A'	ANCHOR TYPE 'B'	ANCHOR TYPE 'A'	ANCHOR TYPE 'B'	ANCHOR TYPE 'A'	ANCHOR TYPE 'B'	ANCHOR TYPE 'A'	ANCHOR TYPE 'B'
2	16"	117.2	125.9	116.5	125.3	115.0	123.9	114.2	123.1	112.0	121.1
	24"	79.4	85.3	78.7	84.6	77.3	83.3	76.5	82.5	74.3	80.4
	32"	60.6	65.0	59.9	64.3	58.4	62.9	57.6	62.2	55.4	60.1
	48"	41.7	44.6	41.0	44.0	39.6	42.6	38.7	41.8	36.6	39.8
	64"	32.3	34.5	31.6	33.8	30.1	32.5	29.3	31.7	27.1	29.6
	72"	29.1	31.1	28.4	30.4	27.0	29.1	26.2	28.3	24.0	26.2
3	16"	134.1	144.1	133.4	143.5	131.9	142.1	131.1	141.3	128.9	139.3
	24"	90.7	97.4	90.0	96.8	88.6	95.4	87.7	94.6	85.6	92.6
	32"	69.0	74.1	68.3	73.4	66.9	72.0	66.0	71.3	63.9	69.2
	48"	47.4	50.7	46.6	50.0	45.2	48.7	44.4	47.9	42.2	45.9
	64"	36.5	39.0	35.8	38.4	34.4	37.0	33.5	36.2	31.4	34.2
	72"	32.9	35.1	32.2	34.5	30.7	33.1	29.9	32.3	27.8	30.3

LOADS SHOWN IN CHARTS ABOVE ARE FOR PANEL LENGTHS UP TO 80"
FOR SHORTER PANEL LENGHTS (68" TO 80"), DETERMINE DESIGN LOADS AS FOLLOWS

$$\text{DESIGN LOAD} = \frac{\text{LOAD FROM CHART X 80}}{\text{NEW PANEL LENGTH}}$$

4/20/2021
FL #38617

JALAL FAROOQ
LICENSE
No. 81223
STATE OF FLORIDA
PROFESSIONAL ENGINEER

AL-FAROOQ CORPORATION
ENGINEERS & PRODUCT DEVELOPMENT
9360 SUNSET DRIVE, SUITE 220
MIAMI, FLORIDA 33173 (C.A.N. 3538)
TEL. (305) 264-8100 FAX. (305) 262-6978

SOLAR-RACK\21-27F-RT

RT-MINI II ROOF TOP PV MOUNTING SYSTEM

Roof Tech Inc.
10620 Treena Street Suite 230
San Diego, CA. 92131
Phone: (858) 935-6064 Fax:

revisions:

no	date	by	description

date: 03-23-21
scale: 1/2"=1'-0"
dr. by: TARIQ
chk. by:

drawing no.
21-27F

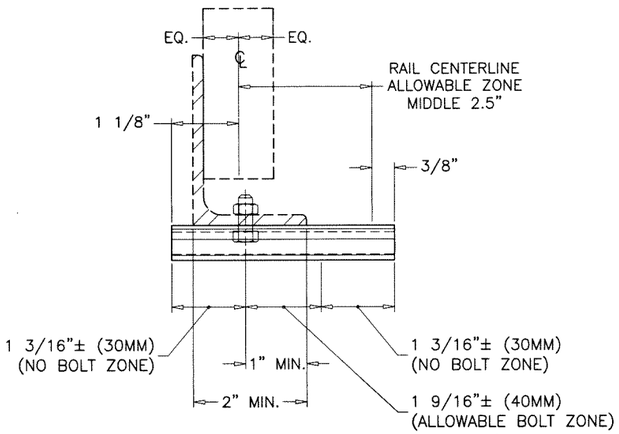

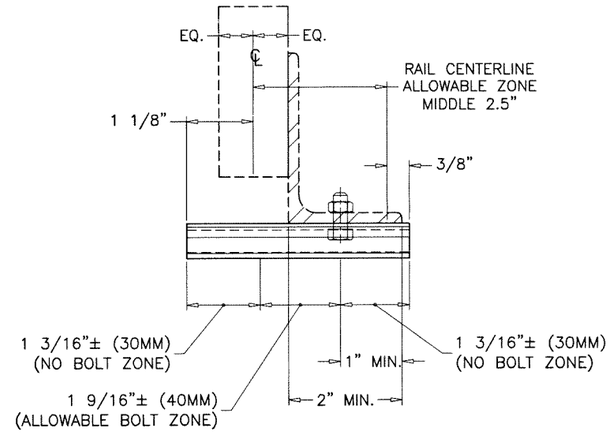

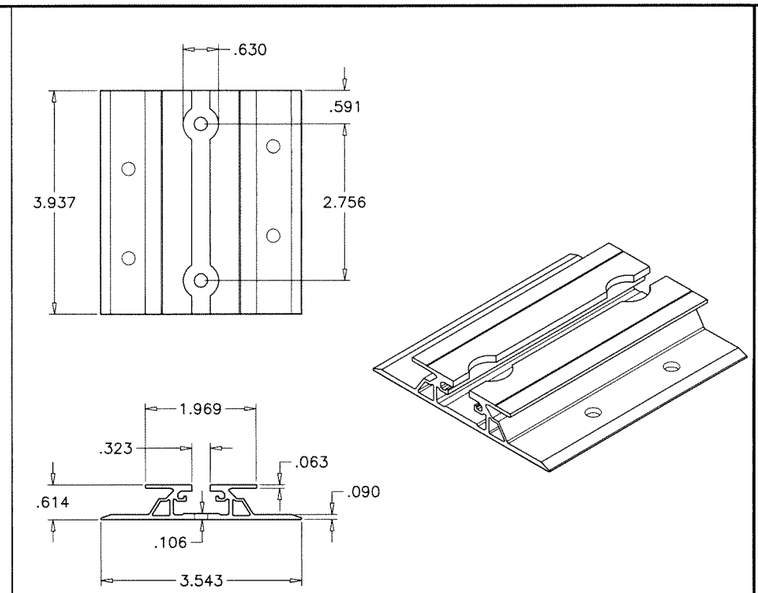

RT–MINI II
6063–T5

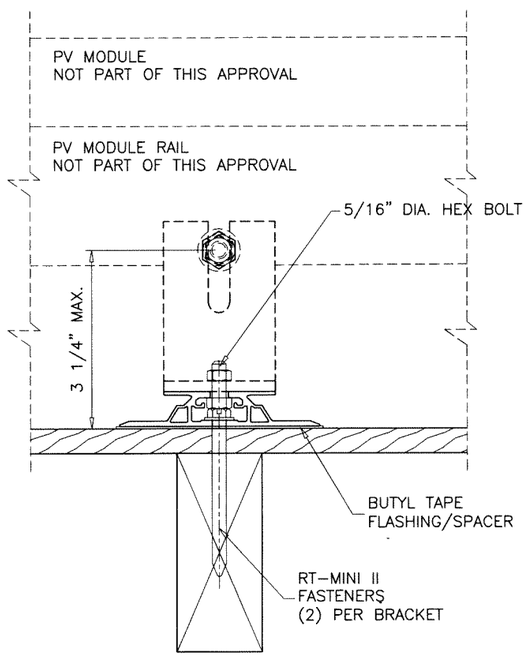

SECTION A–A

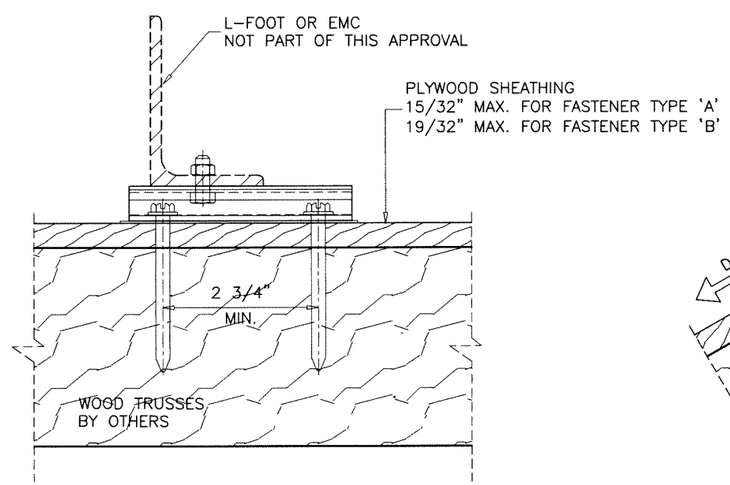

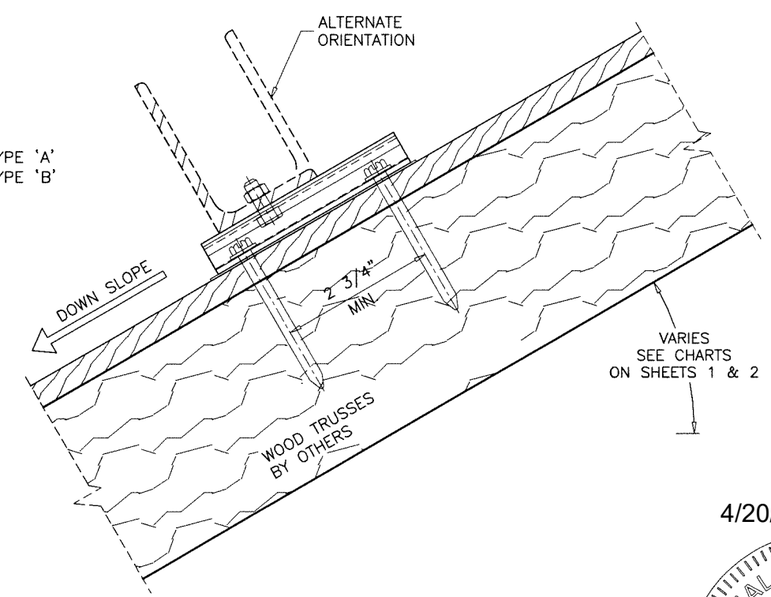

RT–MINI II FASTENERS: (AT ROOF TRUSSES)

TYPE 'A'– M5 X 60mm SS304 SELF–DRILLING SCREWS (MAX. ALLOW. TENSION = 569 lbf, MAX. ALLOW. SHEAR = 404 lbf)

TYPE 'B'– M5 X 90mm SS304 SELF–DRILLING SCREWS (MAX. ALLOW. TENSION = 613 lbf, MAX. ALLOW. SHEAR = 470 lbf)

CENTERED AT WOOD TRUSSES (SG = 0.50 MIN.)

4/20/2021

JALAL FAROOQ
LICENSE
No. 81223
STATE OF FLORIDA
PROFESSIONAL ENGINEER

FL #38617

AL-FAROOQ CORPORATION
ENGINEERS & PRODUCT DEVELOPMENT
9360 SUNSET DRIVE, SUITE 220
MIAMI, FLORIDA 33173 (C.A.N. 3538)
TEL. (305) 264-8100 FAX. (305) 262-6978

SOLAR–RACK\21–27F–RT

RT–MINI II ROOF TOP PV MOUNTING SYSTEM

Roof Tech Inc.
10620 Treena Street Suite 230
San Diego, CA. 92131
Phone: (858) 935–6064 Fax:

revisions:

no	date	by	description

date: 03–23–21
scale: 3/8" = 1"
dr. by: TARIQ
chk. by:

drawing no. 21–27F